Errata

Title & Document Type: 3455A Digital Voltmeter Operating and Service Manual

Manual Part Number: 03455-90003

Revision Date: March 1, 1982

HP References in this Manual

This manual may contain references to HP or Hewlett-Packard. Please note that Hewlett-Packard's former test and measurement, semiconductor products and chemical analysis businesses are now part of Agilent Technologies. We have made no changes to this manual copy. The HP XXXX referred to in this document is now the Agilent XXXX. For example, model number HP8648A is now model number Agilent 8648A.

About this Manual

We've added this manual to the Agilent website in an effort to help you support your product. This manual provides the best information we could find. It may be incomplete or contain dated information, and the scan quality may not be ideal. If we find a better copy in the future, we will add it to the Agilent website.

Support for Your Product

Agilent no longer sells or supports this product. You will find any other available product information on the Agilent Test & Measurement website:

www.tm.agilent.com

Search for the model number of this product, and the resulting product page will guide you to any available information. Our service centers may be able to perform calibration if no repair parts are needed, but no other support from Agilent is available.

Agilent Technologies

OPERATING AND SERVICE MANUAL

DIGITAL VOLTMETER

3455A

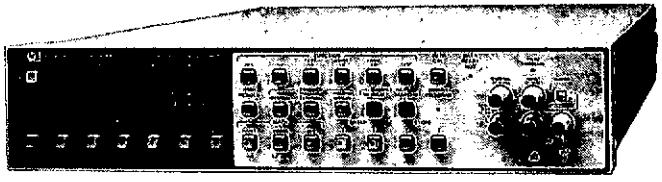

HEWLETT PACKARD

-hp- 3455A

HEWLETT PACKARD

OPERATING AND SERVICE MANUAL

MODEL 3455A
DIGITAL VOLTMETER

Serial Numbers: 1622A00101 and Greater

IMPORTANT NOTICE

This loose leaf manual does not normally require a change sheet. All major change information has been integrated into the manual by page revision. In cases where only minor changes are required, a change sheet may be supplied.

If the Serial Number of your instrument is lower than the one on this title page, the manual contains revisions that do not apply to your instrument. Backdating information given in the manual adapts it to earlier instruments.

Where practical, backdating information is integrated into the text, parts list and schematic diagrams. Backdating changes are denoted by a delta sign. An open delta (Δ) or lettered delta (Δ_A) on a given page, refers to the corresponding backdating note on that page. Backdating changes not integrated into the manual are denoted by a numbered delta (Δ_1) which refers to the corresponding change in the Backdating section (Section VII).

WARNING

To help minimize the possibility of electrical fire or shock hazards, do not expose this instrument to rain or excessive moisture.

Manual Part No. 03455-90003

Microfiche Part No. 03455-90053

Revision A

©Copyright Hewlett-Packard Company 1976
P.O. Box 301, Loveland, Colorado, 80537 U.S.A.

Revised Date: March 1982

Printed: July 1979

HEWLETT PACKARD

CERTIFICATION

Hewlett-Packard Company certifies that this product met its published specifications at the time of shipment from the factory. Hewlett-Packard further certifies that its calibration measurements are traceable to the United States National Bureau of Standards, to the extent allowed by the Bureau's calibration facility, and to the calibration facilities of other International Standards Organization members.

WARRANTY

This Hewlett-Packard product is warranted against defects in material and workmanship for a period of one year from date of shipment [,except that in the case of certain components listed in Section I of this manual, the warranty shall be for the specified period] . During the warranty period, Hewlett-Packard Company will, at its option, either repair or replace products which prove to be defective.

For warranty service or repair, this product must be returned to a service facility designated by -hp-. Buyer shall prepay shipping charges to -hp- and -hp- shall pay shipping charges to return the product to Buyer. However, Buyer shall pay all shipping charges, duties, and taxes for products returned to -hp- from another country.

Hewlett-Packard warrants that its software and firmware designated by -hp- for use with an instrument will execute its programming instructions when properly installed on that instrument. Hewlett-Packard does not warrant that the operation of the instrument, or software, or firmware will be uninterrupted or error free.

LIMITATION OF WARRANTY

The foregoing warranty shall not apply to defects resulting from improper or inadequate maintenance by Buyer, Buyer-supplied software or interfacing, unauthorized modification or misuse, operation outside of the environmental specifications for the product, or improper site preparation or maintenance.

NO OTHER WARRANTY IS EXPRESSED OR IMPLIED. HEWLETT-PACKARD SPECIFICALLY DISCLAIMS THE IMPLIED WARRANTIES OF MERCHANTABILITY AND FITNESS FOR A PARTICULAR PURPOSE.

EXCLUSIVE REMEDIES

THE REMEDIES PROVIDED HEREIN ARE BUYER'S SOLE AND EXCLUSIVE REMEDIES. HEWLETT-PACKARD SHALL NOT BE LIABLE FOR ANY DIRECT, INDIRECT, SPECIAL, INCIDENTAL, OR CONSEQUENTIAL DAMAGES, WHETHER BASED ON CONTRACT, TORT, OR ANY OTHER LEGAL THEORY.

ASSISTANCE

Product maintenance agreements and other customer assistance agreements are available for Hewlett-Packard products.

For any assistance, contact your nearest Hewlett-Packard Sales and Service Office. Addresses are provided at the back of this manual.

TABLE OF CONTENTS

Section Page

I. GENERAL INFORMATION....1-1
1-1. Introduction....1-1
1-5. Specifications....1-1
1-7. Instrument and Manual Identification...1-1
1-11. Description....1-1
1-13. Options....1-1
1-15. Accessories Supplied....1-1
1-17. Accessories Available....1-1
1-19. Recommended Test Equipment....1-2
1-21. Safety Considerations....1-2

Section Page

II. INSTALLATION....2-1
2-1. Introduction....2-1
2-3. Initial Inspection....2-1
2-5. Preparation for Use....2-1
2-6. Power Requirements....2-1
2-8. Line Voltage Selection....2-1
2-10. Power Cable....2-1
2-12. Grounding Requirements....2-1
2-14. Bench Use....2-1
2-16. Rack Mounting....2-2
2-18. Interface Connections....2-2
2-22. Environmental Requirements....2-2
2-23. Operating and Storage Temperature...2-3
2-26. Humidity....2-3
2-28. Altitude....2-3
2-30. Repackaging for Shipment....2-3

Section Page

III OPERATING INSTRUCTIONS....3-1
3-1. Introduction....3-1
3-3. Operating Characteristics....3-1
3-4. Turn-On and Warm-Up....3-1
3-6. Self-Test Operation....3-1
3-10. DC Voltage Measurement....3-1
3-12. Resistance Measurement....3-2
3-14. AC Voltage Measurement....3-2
3-19. Math Feature....3-3
3-23. Enter and Store....3-4
3-27. High Resolution Mode....3-4
3-29. Auto-Cal....3-5
3-33. Trigger....3-5
3-36. Sample Rate....3-5
3-38. Auto Range....3-6
3-41. Guarding....3-6
3-42. Common-Mode Voltages....3-6
3-44. Guard Connection....3-6
3-46. Guarding Information....3-6
3-48. Remote Operation....3-7
3-49. General....3-7
3-53. Address Selection....3-7
3-56. Program Codes....3-8
3-61. Data Messages....3-9
3-69. Device Control Messages....3-12
3-78. Interrupt and Device Status Messages....3-12

Section Page

III. OPERATING INSTRUCTIONS (Cont'd)
3-82. Data Output Characteristic....3-13
3-84. Bail Out Message....3-13
3-86. Instrument Measurement Times (Remote Control)....3-13
3-88. Remote Programming Examples....3-14
3-90. Operators Checks....3-14
3-92. Bench Use....3-14
3-94. HP-IB Operation....3-14

Section Page

IV. PERFORMANCE TESTS....4-1
4-1. Introduction....4-1
4-3. Equipment Required....4-1
4-5. Performance Test Card....4-1
4-7. Calibration Cycle....4-1
4-9. Input Terminals/Control Settings....4-1
4-11. Performance Test Failure....4-1
4-13. Specification Breakdown....4-1
4-17. DC Accuracy Test Considerations....4-2
4-26. Operational Verification Tests....4-3
4-27. DC Operational Accuracy Test....4-3
4-30. Test Procedure....4-3
4-31. AC Operational Accuracy Test....4-5
4-34. Test Procedure....4-5
4-35. Ohmmeter Accuracy Test....4-8
4-37. Test Procedure....4-8
4-38. DC Voltmeter Input Resistance Test....4-9
4-39. Performance Test....4-9
4-40. DC Voltmeter Accuracy Test....4-9
4-43. Test Procedure....4-10
4-44. AC Voltmeter Accuracy Test....4-12
4-47. Test Procedure....4-12
4-48. Ohmmeter Accuracy Test....4-16
4-50. Test Procedure....4-16
4-51. Common-Mode and Normal-Mode Rejection Test....4-17
4-54. Test Procedure....4-17
4-55. DC Voltmeter Input Resistance Test....4-18
4-56. AC Voltmeter Input Impedance Test....4-19

Section Page

V. ADJUSTMENTS....5-1
5-1. Introduction....5-1
5-3. Equipment Required....5-1
5-5. Adjustment Interval....5-1
5-7. Adjustment Sequence....5-1
5-9. Test Point and Adjustment Locations...5-1
5-11. DC Zero Adjustments....5-1
5-12. DC and Ohms Reference Adjustments...5-2
5-14. Adjustment Procedure....5-2
5-15. RMS Convertor Adjustments (Standard Model 3455A Only)....5-3
5-16. Average Convertor Adjustments (3455A Option 001 Only)....5-4
5-18. Adjustment Procedure....5-4

TABLE OF CONTENTS (Cont'd)

Section Page

VI. REPLACEABLE PARTS 6-1
6-1. Introduction 6-1
6-4. Ordering Information 6-1
6-6. Non-Listed Parts 6-1
6-8. Parts Changes 6-1
6-10. Proprietary Parts 6-1
6-12. Exchange Assemblies 6-2
6-15. Service Kit 6-2

Section Page

VII. MANUAL CHANGES 7-1
7-1. Introduction 7-1

Section Page

VIII. SERVICE 8-1
8-1 Introduction 8-1
8-3. Safety Considerations .....
8-8. Recommended Test Equipment 8-1
8-10. Introduction 8-2
8-12. Input Switching and DC Attenuator ... 8-2
8-13. General 8-2
8-15. Detailed Description 8-2
8-17. Operational Attenuator 8-2
8-19. Auto Calibration-DC Voltage 8-2
8-20. General 8-2
8-22. Circuit Description 8-4
8-34. Auto-Calibration-Ohms 8-9
8-35. General 8-9
8-37. Circuit Description 8-9
8-42. Auto Calibration-A/D Convertor 8-10
8-44. Circuit Description 8-11
8-47. True RMS AC Convertor 8-11
8-48. General 8-11
8-50. Circuit Description 8-11
8-56. Average Responding AC Convertor (Option 001) 8-12
8-57. General 8-12
8-59. Circuit Description 8-12
8-65. Ohms Convertor 8-13
8-66. General 8-13
8-68. General Description 8-13
8-73. DC Preamplifier 8-14
8-74. General 8-14
8-76. Circuit Description 8-14
8-82. Reference Assembly 8-16
8-83. General 8-16
8-85. Circuit Description 8-16
8-87. Analog-to-Digital Convertor (A/D) .. 8-16
8-88. General 8-16
8-92. Circuit Description 8-17
8-103. Inguard Controller 8-19
8-104. General 8-19
8-107. Circuit Description 8-19
8-115. Main Controller 8-22
8-116. General 8-22
8-118. Circuit Description 8-23
8-141. HP-IB Circuit 8-29
8-142. General 8-29
8-144. Circuit Description 8-29
8-168. Front Panel Operation 8-32
8-169. Circuit Description 8-32

TROUBLESHOOTING

8-174. Introduction 8-35
8-176. General Block Diagram Theory of Operation 8-35
8-179. Outguard Section 8-35
8-185. Inguard Section 8-36
8-194. Preliminary Troubleshooting Check .. 8-36
8-195. Instrument Half-Splitting Techniques 8-36
8-198. Service Group Summary 8-37

SERVICE GROUP A

8-A-1 Turn-On Circuitry (Inguard and Outguard) 8-40
8-A-3. Inguard/Outguard Isolation 8-40
8-A-5. Outguard Troubleshooting (Schematic 8) 8-40
8-A-6. Inguard Troubleshooting (Schematic 5, 6, 7) 8-40
8-A-8. A10 Motherboard Troubleshooting (Schematic 5, 6, 7) 8-40
8-A-10. A/D Board Troubleshooting (Schematic 5, 6) 8-41
8-A-12. Inguard/Outguard Transfer Circuit Troubleshooting (Schematic 7,8) 8-41

SERVICE GROUP B

8-B-1. Auto-Cal and DC Troubleshooting (Inguard) 8-43
8-B-3. Auto-Cal Constants 8-43
8-B-9. Auto-Cal Switch Closures (Schematic 1, 5, 6, 7) 8-50
8-B-11. Cal Constants Service Procedure 8-50
8-B-14. Switch Closure Table 8-52
8-B-16. Auto-Cal Troubleshooting (Schematic 1, 7) 8-52
8-B-18. DC Inoperative (Schematic 1) 8-54
8-B-20. Leakage and Other Various Malfunctions 8-54
8-B-23. 10 V Range or Constant 10 and 11 Fail ... 8-55
8-B-24. 1 V Range or Constant 0, 1, and 2 Fails .. 8-55
8-B-25. 100 mV Range or Constant 3 Fails 8-55
8-B-26. 100 V Range or Constants 5, 4, and 7 Fail 8-55
8-B-27. 1000 V Range or Constant 6 Fails 8-56
8-B-28. Various Other Malfunctions 8-56
8-B-30. Other Troubleshooting Hints 8-57
8-B-31. General Noise 8-57
8-B-33. DC Noise (Schematic 1, 5, and 6) 8-57

TABLE OF CONTENTS (Cont'd)

SERVICE GROUP C

8-C-1. AC Convertor Troubleshooting....8-59
8-C-2. True RMS Convertor Servicing (Schematic 3)....8-59
8-C-4. Preamplifier and Input Alternator Circuitry....8-60
8-C-6. Absolute Amplifier Circuitry....8-61
8-C-8. Squaring Amplifier, Intergrator, and Antilog Circuitry....8-61
8-C-10. AC/DC Operation....8-62
8-C-12. AC Noise (Schematic 3)....8-62
8-C-16. Miscellaneous Troubleshooting (Schematic 3)....8-63
8-C-17. Average Responding AC Convertor (Schematic 2)....8-64

SERVICE GROUP D

8-D-1. Ohm Troubleshooting (Schematic 1, 4)...8-65
8-D-2. Ohms Circuit Isolation....8-65
8-D-4. Ohms Servicing....8-65
8-D-6. Ohms Convertor Troubleshooting (Schematic 1, 4)....8-65
8-D-8. Miscellaneous Ohms Troubleshooting Hints....8-66
8-D-9. Ohms Offsets....8-66
8-D-11. Ohms Noise (Schematic 1, 4)....8-67

SERVICE GROUP E

8-E-1. A/D Convertor and Inguard Logic Troubleshooting....8-68
8-E-2. A/D Convertor Servicing (Schematic 6, 7)....8-68
8-E-4. No A/D Waveform....8-69
8-E-6. Incorrect A/D Waveform....8-69
8-E-7. Correct A/D Waveform....8-69
8-E-8. A/D Noise (Schematic 6)....8-70
8-E-10. Inguard Logic Troubleshooting (Schematic 7)....8-70

SERVICE GROUP E (Cont'd)

8-E-12. Inguard Logic Troubleshooting with no A/D Waveform....8-70
8-E-13. Inguard Logic Troubleshooting with an A/D Waveform....8-72

SERVICE GROUP F

8-F-1. Outguard Logic Troubleshooting (Schematic 8, 9, 10)....8-73
8-F-3. Main Controller Troubleshooting (Schematic 8)....8-73
8-F-4. Front Panel Troubleshooting....8-73
8-F-5. Front Panel Operation Check....8-73
8-F-6. Front Panel Servicing (Schematic 10)....8-74
8-F-7. Front Panel LED's Switch, and Key Cap Replacement Procedure....8-74
8-F-8. HP-IB Troubleshooting (Schematic 9)...8-75

SERVICE GROUP G

8-G-1. Miscellaneous Troubleshooting....8-77
8-G-2. Power Supplies (Schematic 11)....8-77
8-G-3. Reference Assembly (Schematic 5)....8-77
8-G-4. Turn-Over Errors (Schematic 1, 5, and 6)....8-78
8-G-6. Other Troubleshooting (Schematic 8 and 11)....8-78

SERVICE GROUP H

8-H-1. Troubleshooting Diagrams....8-79
8-H-3. General Troubleshooting Diagram....8-79
8-H-5. Inguard Troubleshooting Diagram....8-79
8-H-7. Outguard Troubleshooting....8-117

APPENDIX

Page
A-1. Introduction....A-1

LIST OF TABLES

Table Page
1-1. Specifications....1-2
1-2. Typical Operating Characteristics....1-7
1-3. Recommended Test Equipment....1-8
3-1. Maximum Front Panel Reading Rates....3-6
3-2. HP-IB Interface Capability....3-7
3-3. Bus Messages....3-8
3-4. HP-IB Program Codes....3-9
3-5. Binary Program Codes....3-11
3-6. Typical HP-IB Controlled Meassurement Times....3-14
4-1. DC Accuracy Test (1 V, 10 V Full Scale; High Resolution On)....4-3
4-2. DC Accuracy Test (High Resolution Off)...4-5
4-3. DC Accuracy Test (High Resolution On)...4-5
4-4. AC Accuracy Test 30 Hz to 100 kHz (Standard Model 3455A only)....4-7
4-5. AC Accuracy Tests 100 kHz to 1 MHz (Standard Model 3455A only)....4-7
4-6. AC Accuracy Test 30 Hz to 100 kHz (3455A Option 001 only)....4-8
4-7. Two-Wire Ohm Accuracy Test....4-8
4-8. Four-Wire Ohms Accuracy Test....4-9
4-9. DC Accuracy Test (1 V, 10 V Full-Scale; High Resolution Off)....4-10

LIST OF TABLES (Cont'd)

Table		Page
4-10.	DC Accuracy Test (1 V, 10 V Full Scale; High Resolution On)	4-10
4-11.	DC Accuracy Test (High Resolution Off)	4-11
4-12.	DC Accuracy Test (High Resolution On)	4-11
4-13.	AC Accuracy Test 30 Hz to 100 kHz (Standard Model 3455A only)	4-14
4-14.	AC Accuracy Test 100 kHz to 1 MHz (Standard Model 3455A only)	4-15
4-15.	AC Accuracy Test 30 Hz to 100 kHz (Model 3455A Option 001 only)	4-15
4-16.	Two-Wire Ohm Accuracy Test	4-16
4-17.	Four-Wire Ohms Accuracy Test	4-17
5-1.	DC Zero Adjustment Padding List (A10R110)	5-2
5-2.	Jumper Removal (A15 Board)	5-4
5-3.	Jumper Removal (A13 Board)	5-4
6-1.	Standard Abbreviations	6-1
6-2.	Code List of Manufacturers	6-2
6-3.	Replaceable Parts	6-3
8-1.	AC Convertor Ranging	8-11
8-2.	A/D Convertor Switch Control Signal Descriptions	8-21
8-3.	Service Group Listing	8-38
8-B-1.	Auto-Cal Constants	8-43
8-B-2.	Auto-Cal Switch Closures	8-50
8-B-3.	Gate Function in Auto-Cal	8-51
8-B-4.	Switch Driver Voltage Levels	8-51
8-B-5.	Cal Constant Monitoring Points.	
8-B-6.	3455A DVM Switch Closures	8-53
8-B-7.	Possible Auto-Cal Failure Causes	8-54
8-D-1.	Ohms Gain and Switch Configuration	8-66
8-E-1.	Mneumonic Definitions	8-71
8-G-1.	Power Supplies Locations	8-76

LIST OF ILLUSTRATIONS

Figure		Page
2-1.	Line Voltage Selection	2-1
2-2.	Power Cord Configuration	2-1
2-3.	Typical HP-IB System Interconnections	2-2
3-1.	Front and Rear Panel Features	3-0
3-2.	Ohmmeter Measurement Connections	3-2
3-3.	Connecting the Guard	3-7
3-4.	Address Selection	3-8
3-5.	Operational Verification Flowchart	3-15/3-16
4-1.	Ambiguous Regions	4-3
4-2.	DC Accuracy Test	4-4
4-3.	AC/DC Thermal Transfer Measurement (Alternate Frequency Response Test)	4-6
4-4.	DC Accuracy Test	4-11
4-5.	AC/DC Thermal Transfer Measurement (Alternate Frequency Response Test)	4-13
4-6.	DC Common-Mode Rejection Test	4-18
4-7.	AC Common-Mode Rejection Test	4-18
5-1.	100 Volt Zero Adjustment	5-1
5-2.	1 Volt Zero Adjustment	5-2
8-1.	Function Block Diagram	8-1
8-2.	Simplified Input Switching Diagram	8-2
8-3.	Operational Attenuator Diagram	8-3
8-4.	Basic Voltmeter Diagram	8-3
8-5.	Simplified Auto-Cal Switching Schematic	8-3
8-6.	10 V dc Input Offset Error measurement	8-4
8-7.	1 V dc Input Offset Error Measurement	8-4
8-8.	.1 V dc Input Offset Error Measurement	8-5
8-9.	100 V dc and 100 V dc Input Offset Error Measurement	8-6
8-10.	10 V dc Gain Error Measurement	8-6
8-11.	.1 V dc and 1 V dc Gain Error Measurement	8-7
8-12.	1 V dc Reference Offset Error Measurement	8-7
8-13.	100 V dc and 1000 V dc Gain Error Measurement	8-8
8-14.	100 V dc Reference Offset Error Measurement	8-8
8-15.	Basic Ohms Measurement Diagram	8-9
8-16.	10 kΩ, 100 kΩ, 10 MΩ Offset Error Measurement	8-9
8-17.	Ohms Reference Measurement 8-10	8-10
8-18.	Simplified A/D Convertor Diagram	8-10
8-19.	Simplified True RMS Convertor	8-11
8-20.	Simplified Average Responding AC Convertor	8-12
8-21.	Ohms Convertor Current Source	8-13
8-22.	Ohms Convertor Voltage Limit	8-14
8-23.	Equivalent DC Preamplifier Output Circuit	8-15
8-24.	DC Preamp, Simplifier Feedback Circuitry	8-15
8-25.	Simplified Voltage Reference Diagram	8-16
8-26.	Integrator Output Waveform	8-16
8-27.	Integrator Output Waveforms for Different Input Voltage Levels	8-17
8-28.	Simplified A/D Input and Reference Diagram	8-17
8-29.	Simplified A/D Convertor Diagram	8-18
8-30.	Simplified Inguard Controller Flowchart	8-19
8-31.	Controller Data Transfer Circuit	8-19
8-32.	Data Transfer Signals	8-20
8-33.	Inguard Controller Reset Circuit	8-20
8-34.	Simplified A/D Convertor Control Circuit	8-21
8-35.	Simplified Program ROM Circuit	8-22
8-36.	Simplified Output Circuit	8-23
8-37.	Simplified Main Controller Flowchart	8-24
8-38.	Main Controller ROM Circuit	8-25
8-39.	Main Controller RAM Circuit	8-26
8-40.	Main Controller ALU Circuit	8-27
8-41.	Main Controller Interrupt Circuit	8-28
8-42.	Simplified Turn-On Interrupt Circuit	8-29

LIST OF LILLUSTRATIONS (Cont'd)

Figure Page

8-41. Main Controller Interrupt Circuit....8-28
8-42. Simplified Turn-On Interrupt Circuit....8-29
8-43. Interface Connections and Bus Structure..8-30
8-44. Simplified Block Diagram....8-35
8-45. Inguard-Outguard Connections....8-37
8-B-1. Auto-Cal Constant #11 (10 V Offset)....8-44
8-B-2. Auto-Cal Constant #10 (10 V Gain)....8-44
8-B-3. Auto-Cal Constant #9 (10 K, 100 K, and 10 M Offsets)....8-45
8-B-4. Auto-Cal Constant #8 (10 K, 100 K, and 10 M Offsets)....8-45
8-B-5. Auto-Cal Constant #7 (100 V Offset #2)...8-46
8-B-6. Auto-Cal Constant #6 (1000 V Offset)....8-46
8-B-7. Auto-Cal Constant #5 (100 V Gain)....8-47
8-B-8. Auto-Cal Constant #4 (100 V Offset #1)...8-47
8-B-9. Auto-Cal Constant #3 (.1 V Offset)....8-48
8-B-10. Auto-Cal Constant #2 (1 V Offset 1)....8-48
8-B-11. Auto-Cal Constant #1 (1 V Offset <2)....8-49
8-B-12. Auto-Cal Constant #0 (1 V Gain)....8-49
8-E-1. A/D Waveforms....8-68
8-H-1. Assembly and Test Point Loading....8-81
8-H-2. General Troubleshooting Procedure Diagram....8-81
8-H-3. Inguard Troubleshooting Procedure Diagram, Auto-Cal Circuitry TEST 13....8-83
8-H-4. Inguard Troubleshooting Procedure Diagram, Auto-Cal Circuitry TEST 12....8-85
8-H-5. Inguard Troubleshooting Procedure Diagram Auto-Cal Circuitry TEST 11....8-87
8-H-6. Inguard Troubleshooting Procedure Diagram, Auto-Cal Circuitry TEST 10....8-89
8-H-7. Inguard Troubleshooting Procedure Diagram, Auto-Cal Circuitry TEST 9....8-91
8-H-8. Inguard Troubleshooting Procedure Diagram, Auto-Cal Circuitry TEST 8....8-93
8-H-9. Inguard Troubleshooting Procedure Diagram, Auto-Cal Circuitry TEST 7....8-95
8-H-10. Inguard Troubleshooting Procedure Diagram, Auto-Cal Circuitry TEST 6....8-97
8-H-11. Inguard Troubleshooting Procedure Diagram, Auto-Cal Circuitry TEST 5....8-99
8-H-12. Inguard Troubleshooting Procedure Diagram, Auto-Cal Circuitry TEST 4....8-101

Figure Page

8-H-13. Inguard Troubleshooting Procedure Diagram, Auto-Cal Circuitry TEST 3....8-103
8-H-14. Inguard Troubleshooting Procedure Diagram, Auto-Cal Circuitry TEST 2....8-105
8-H-15. Inguard Troubleshooting Procedure Diagram, Auto-Cal Circuitry TEST 1....8-107
8-H-16. Inguard Troubleshooting Procedure Diagram, Auto-Cal Circuitry TEST Ø....8-109
8-H-17. Inguard Troubleshooting Procedure Diagram, Inguard/Outguard Transfer Circuitry....8-111
8-H-18. Inguard Troubleshooting Procedure Diagram, Power Supply and Controller Circuitry....8-113
8-H-19. Inguard Troubleshooting Procedure Diagram, A-to-D Convertor Circuitry....8-115
8-H-20. Preliminary Outguard Troubleshooting Procedure Diagram....8-119
8-H-21. Outguard Troubleshooting Procedure Diagram, Main Controller Circuitry....8-121
8-H-22. Outguard Troubleshooting Procedure Diagram, RAM Circuitry....8-123
8-H-23. Outguard Troubleshooting Procedure Diagram, ALU Circuitry....8-125
8-H-24. Outguard Troubleshooting Procedure Diagram, Device Select Circuitry....8-127
8-H-25. Outguard Troubleshooting Procedure Diagram, Interrupt Circuitry....8-129
8-H-26. Outguard Troubleshooting Procedure Diagram, Display Circuitry....8-131
8-H-27. Outguard Troubleshooting Procedure Diagram, HP-IB Circuitry....8-133
8-H-28. Detailed Block Diagram....8-135
8-H-29. Input and Auto-Cal Switching Schematic....8-137
8-H-30. Average Responding AC Convertor....8-139
8-H-31. True RMS AC Convertor Schematic....8-141
8-H-32. Ohms Convertor Schematic....8-143
8-H-33. Reference Assembly....8-147
8-H-34. Analog-to-Digital Convertor Schematic....8-149
8-H-35. Inguard Controller Schematic....8-151
8-H-36. Main Controller Schematic....8-153
8-H-37. HP-IB Schematic....8-155
8-H-38. Front Panel Assembly....8-157
8-H-39. Power Supply Schematic....8-159

HEWLETT PACKARD

SAFETY SUMMARY

The following general safety precautions must be observed during all phases of operation, service, and repair of this instrument. Failure to comply with these precautions or with specific warnings elsewhere in this manual violates safety standards of design, manufacture, and intended use of the instrument. Hewlett-Packard Company assumes no liability for the customer's failure to comply with these requirements. This is a Safety Class 1 instrument.

GROUND THE INSTRUMENT

To minimize shock hazard, the instrument chassis and cabinet must be connected to an electrical ground. The instrument is equipped with a three-conductor ac power cable. The power cable must either be plugged into an approved three-contact electrical outlet or used with a three-contact to two-contact adapter with the grounding wire (green) firmly connected to an electrical ground (safety ground) at the power outlet. The power jack and mating plug of the power cable meet International Electrotechnical Commission (IEC) safety standards.

DO NOT OPERATE IN AN EXPLOSIVE ATMOSPHERE

Do not operate the instrument in the presence of flammable gases or fumes. Operation of any electrical instrument in such an environment constitutes a definite safety hazard.

KEEP AWAY FROM LIVE CIRCUITS

Operating personnel must not remove instrument covers. Component replacement and internal adjustments must be made by qualified maintenance personnel. Do not replace components with power cable connected. Under certain conditions, dangerous voltages may exist even with the power cable removed. To avoid injuries, always disconnect power and discharge circuits before touching them.

DO NOT SERVICE OR ADJUST ALONE

Do not attempt internal service or adjustment unless another person, capable of rendering first aid and resuscitation, is present.

DO NOT SUBSTITUTE PARTS OR MODIFY INSTRUMENT

Because of the danger of introducing additional hazards, do not install substitute parts or perform any unauthorized modification to the instrument. Return the instrument to a Hewlett-Packard Sales and Service Office for service and repair to ensure that safety features are maintained.

DANGEROUS PROCEDURE WARNINGS

Warnings, such as the example below, precede potentially dangerous procedures throughout this manual. Instructions contained in the warnings must be followed.

WARNING

Dangerous voltages, capable of causing death, are present in this instrument. Use extreme caution when handling, testing, and adjusting.

SAFETY SYMBOLS

General Definitions of Safety Symbols Used On Equipment or In Manuals.

Instruction manual symbol: the product will be marked with this symbol when it is necessary for the user to refer to the instruction manual in order to protect against damage to the instrument.

Indicates dangerous voltage (terminals fed from the interior by voltage exceeding 1000 volts must be so marked).

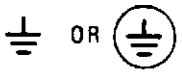

Protective conductor terminal. For protection against electrical shock in case of a fault. Used with field wiring terminals to indicate the terminal which must be connected to ground before operating equipment.

Low-noise or noiseless, clean ground (earth) terminal. Used for a signal common, as well as providing protection against electrical shock in case of a fault. A terminal marked with this symbol must be connected to ground in the manner described in the installation (operating) manual, and before operating the equipment.

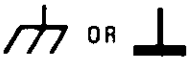

Frame or chassis terminal. A connection to the frame (chassis) of the equipment which normally includes all exposed metal structures.

Alternating current (power line).

Direct current (power line).

Alternating or direct current (power line).

WARNING

The WARNING sign denotes a hazard. It calls attention to a procedure, practice, condition or the like, which, if not correctly performed or adhered to, could result in injury or death to personnel.

CAUTION

The CAUTION sign denotes a hazard. It calls attention to an operating procedure, practice, condition or the like, which,if not correctly performed or adhered to, could result in damage to or destruction of part or all of the product.

NOTE:

The NOTE sign denotes important information. It calls attention to procedure, practice, condition or the like, which is essential to highlight.

SECTION I
GENERAL INFORMATION

1-1. INTRODUCTION.

1-2. This Operating and Service Manual contains information necessary to install, operate, test, adjust, and service the Hewlett-Packard Model 3455A Digital Voltmeter.

1-3. Included with this manual is an Operating information supplement. The supplement is a duplication of the first three sections of this manual and should be kept with the instrument for use by the operator.

1-4. This section of the manual contains the performance specifications and general operating characteristics of the 3455A. Also listed are available options and accessories, and instrument and manual identification information.

1-5. SPECIFICATIONS.

1-6. Operating specifications for the 3455A are listed in Table 1-1. These specifications are the performance standards or limits against which the instrument is tested. Table 1-2 lists general operating characteristics of the instrument. These characteristics are not specifications but are typical operating characteristics included as additional information for the user.

1-7. INSTRUMENT AND MANUAL IDENTIFICATION.

1-8. Instrument identification by serial number is located on the rear panel. Hewlett-Packard uses a two-section serial number consisting of a four-digit prefix and a five-digit suffix separated by a letter designating the country in which the instrument was manufactured. (A = U.S.A.; G = West Germany; J = Japan; U = United Kingdom.) The prefix is the same for all identical instruments and changes only when a major instrument change is made. The suffix, however, is assigned sequentially and is unique to each instrument.

1-9. This manual applies to instruments with serial numbers indicated on the title page. If changes have been made in the instrument since this manual was printed, a yellow "Manual Changes" supplement supplied with the manual will define these changes and explain how to adapt the manual to the newer instruments. In addition, backdating information contained in Section VII adapts the manual to instruments with serial numbers lower than those listed on the title page.

1-10. Part numbers for the manual and the microfiche copy of the manual are also listed on the title page.

1-11. DESCRIPTION.

1-12. The Model 3455A Digital Voltmeter makes ac voltage measurements with five digit resolution and dc voltage and resistance measurements with 5 or 6 digit resolution as programmed by the user. The 3455A employs an automatic calibration (AUTO CAL) feature which automatically corrects for possible gain and offset errors in the analog circuitry to provide maximum accuracy. A removable reference module permits external calibration of the dc voltage and resistance functions. The reference module can be removed, calibrated and returned to the instrument, or the module can be replaced with another recently calibrated reference. A MATH feature permits voltage or resistance measurements to be scaled into convenient units or to be read directly in percent error from a selected reference. The 3455A is HP-IB programmable for system applications.

NOTE

HP-IB is Hewlett-Packard's implementation of IEEE std 488-1975, "standard digital interface for programmable instrumentation".

1-13. OPTIONS.

1-14. The following options are available for use with the Model 3455A:

Option 001: Average Responding AC Converter
Option 907: Front Handle Kit
Option 908: Rack Mounting Kit
Option 909: Front Handle and Rack Mounting Kit
Option 910: Additional Set of Operating Information and Operating and Service Manuals

1-15. Accessories Supplied.

1-16. A service kit (-hp- Part No. 03455-84411) consisting of a PC extender board and a fuse is supplied with the Model 3455A.

1-17. ACCESSORIES AVAILABLE.

1-18. The following is a list of accessories available for use with the Model 3455A.

Accessory No.	Description
11177A	3455A Reference Module
34111A	High Voltage Probe (40 kV dc)
10631A	HP-IB Cable 1 meter (39.37 in.)
10631B	HP-IB Cable 2 meter (78.74 in.)
10631C	HP-IB Cable 4 meter (157.48 in.)
03455-61609	Inguard/Outguard Service Cable

1-19. Recommended Test Equipment.

1-20. Equipment required to maintain the Model 3455A is listed in Table 1-3. Other equipment may be substituted if it meets the requirements listed in the table.

1-21. SAFETY CONSIDERATIONS.

1-22. The 3455A is a safety class I instrument (provided with a protective earth terminal). The instrument and manual should be reviewed for safety symbols and instructions before operation.

Table 1-1. Specifications.

DC VOLTAGE

Specifications apply with Auto-Cal ON

Ranges		Maximum Display	
High Resolution Off	High Resolution On	High Resolution Off	High Resolution On
.1V	—	±.149999V	—
1V	1V	±1.49999V	±1.499999V
10V	10V	±14.9999V	±14.99999V
100V	100V	±149.999V	±149.9999V
1000V	1000V	±1000.00V	±1000.000V

Range Selection: Manual, Automatic, or Remote

PERFORMANCE (HIGH RESOLUTION OFF)

Temperature Coefficient: (0°C to 50°C)

0.1V range: ±(0.0003% of reading + 0.15 digits)/°C
1V range: ±(0.0003% of reading + 0.015 digits)/°C
10V range: ±(0.00015% of reading + 0.01 digits)/°C
100 & 1000V range: ±(0.0003% of reading + .01 digits)/°C

Accuracy: (1 digit = .001% of range)

24 hours; 23°C ±1°C
10V range: ±(0.002% of reading + 1 digit)
1V range: ±(0.003% of reading + 1 digit)
0.1V range: ±(0.004% of reading + 4 digits)
100 & 1000V range: ±(0.004% of reading + 1 digit)

90 days; 23°C ±5°C
10V range: ±(0.005% of reading + 1 digit)
1V range: ±(0.006% of reading + 1 digit)
0.1V range: ±(0.007% of reading + 4 digits)
100 & 1000V range: ±(0.007% of reading + 1 digit)

6 months; 23°C ±5°C
10V range; ±(0.008% of reading + 1 digit)
1V range: ±(0.009% of reading + 1 digit)
0.1V range: ±(0.010% of reading + 5 digits)
100 & 1000V range: ±(0.010% of reading + 1 digit)

1 year; 23°C ±5°C
10V range: ±(0.013% of reading + 1 digit)
1V range: ±(0.014% of reading + 1 digit)
0.1V range: ±(0.015% of reading + 6 digits)
100 & 1000V range: ±(0.015% of reading + 1 digit)

PERFORMANCE (HIGH RESOLUTION ON)

Temperature Coefficient: (0°C to 50°C)

1V range: ±(0.0003% of reading + 0.15 digits)/°C
10V range: ±(0.00015% of reading + 0.1 digits)/°C
100 & 1000V range: ±(0.0003% of reading + 0.1 digits)/°C

Accuracy: (1 digit = .001% of range)

24 hours; 23°C ±1°C
10V range: ±(0.002% of reading + 3 digits)
100 & 1000V range: ±(0.004% of reading + 3 digits)
1V range: ±(0.003% of reading + 4 digits)

90 days; 23°C ±5°C
10V range: ±(0.005% of reading + 3 digits)
100 & 1000V range: ±(0.007% of reading + 3 digits)
1V range: ±(0.006% of reading + 4 digits)

6 months; 23°C ±5°C
10V range: ±(0.008% of reading + 3 digits)
100 & 1000V range: ±(0.010% of reading + 3 digits)
1V range: ±(0.009% of reading + 5 digits)

1 year; 23°C ±5°C
10V range: ±(0.013% of reading + 3 digits)
100 & 1000V range: ±(0.015% of reading + 3 digits)
1V range: ±(0.014% of reading + 6 digits)

INPUT CHARACTERISTICS

Input Resistance:

0.1V through 10V range: $>10^{10}$ ohms
100V and 1000V range: 10 megohm ±0.1% (with Auto-Cal OFF)

Maximum Input Voltage:

High to Low Input Terminals: ±1000V peak
Guard to Chassis: ±500V peak
Guard to Low Terminal: ±200V peak

Normal Mode Rejection (NMR): NMR is the ratio of the peak normal-mode voltage to the peak error voltage in the reading.

50 Hz operation: > 60 dB at 50 Hz ± .01%
60 Hz operation: > 60 dB at 60 Hz ± .01%

Effective Common Mode Rejection (ECMR): ECMR is the ratio of the peak common-mode voltage to the resultant peak error voltage in the reading with 1 kΩ unbalance in low lead.

AC Input:

50 Hz operation: > 160 dB at 50 Hz ± 0.1%
60 Hz operation: > 160 dB at 60 Hz ± 0.1%

DC Input:

> 140 dB

Table 1-1. Specifications (Cont'd).

Maximum Reading Rate:

60Hz Gate Length

	High Resolution Off	High Resolution On
Local	5 readings/sec.	3 readings/sec.
Remote	24 readings/sec.	6 readings/sec.

50Hz Gate Length

	High Resolution Off	High Resolution On
Local	3.5 readings/sec.	2.5 readings/sec.
Remote	22 readings/sec.	5 readings/sec.

OHMS

Ranges		Maximum Display	
High Resolution Off	High Resolution On	High Resolution Off	High Resolution On
.1kΩ	—	.149999kΩ	—
1kΩ	1kΩ	1.49999kΩ	1.499999kΩ
10kΩ	10kΩ	14.9999kΩ	14.99999kΩ
100kΩ	100kΩ	149.999kΩ	149.9999kΩ
1000kΩ	1000kΩ	1499.99kΩ	1499.999kΩ
10000kΩ	10000kΩ	14999.9kΩ	14999.99kΩ

Range Selection: Manual, Automatic, or Remote

Function Selection: 2 wire k ohms or 4 wire k ohms

PERFORMANCE (HIGH RESOLUTION OFF)

Temperature Coefficient: (0°C to 50°C)

0.1kΩ range: (0.0003% of reading + 0.2 digits)/°C
1,10 and 100kΩ range: (0.0003% of reading + 0.02 digits)/°C
1000kΩ range: (0.0005% of reading + 0.02 digits)/°C
10,000kΩ range: (0.004% of reading + 0.02 digits)/°C

Accuracy: 4 wire k ohms* (1 digit = .001% of range)

24 hours; 23°C ±1°C
0.1kΩ range: ±(0.003% of reading + 4 digits)
1kΩ range: ±(0.003% of reading + 1 digit)
10kΩ range: ±(0.005% of reading + 2 digits)
100kΩ range: ±(0.002% of reading + 2 digits)
1000kΩ range: ±(0.012% of reading + 5 digits)
10,000kΩ range: ±(0.1% of reading + 5 digits)

90 days; 23°C ±5°C
0.1kΩ range: ±(0.005% of reading + 5 digits)
1kΩ range: ±(0.005% of reading + 1 digit)
10kΩ range: ±(0.007% of reading + 2 digits)
100kΩ range: ±(0.004% of reading + 2 digits)
1000kΩ range: ±(0.014% of reading + 5 digits)
10,000kΩ range: ±(0.100% of reading + 5 digits)

6 months; 23°C ±5°C
0.1kΩ range: ±(0.005% of reading + 6 digits)
1kΩ range: ±(0.005% of reading + 1 digit)
10kΩ range: ±(0.007% of reading + 2 digits)
100kΩ range: ±(0.004% of reading + 3 digits)
1000kΩ range: ±(0.014% of reading + 5 digits)
10,000kΩ range: ±(0.100% of reading + 5 digits)

1 year; 23°C ±5°C
0.1kΩ range: ±(0.006% of reading + 7 digits)
1kΩ range: ±(0.006% of reading + 2 digits)
10kΩ range: ±(0.008% of reading + 3 digits)
100kΩ range: ±(0.005% of reading + 4 digits)
1000kΩ range: ±(0.015% of reading + 6 digits)
10,000kΩ range: ±(0.100% of reading + 6 digits)

PERFORMANCE (HIGH RESOLUTION ON)

Temperature Coefficient: (0°C to 50°C)

1,10 and 100kΩ range: ±(0.0003% of reading + 0.2 digits)/°C
1000kΩ range: ±(0.0005% of reading + 0.2 digits)/°C
10,000kΩ range: ±(0.004% of reading + 0.2 digits)/°C

Accuracy: 4 wire k ohms* (1 digit = .0001% of range)

24 hours; 23°C ±1°C
1kΩ range: ±(0.0025% of reading + 4 digits)
10kΩ range: ±(0.0045% of reading + 4 digits)
100kΩ range: ±(0.0020% of reading + 5 digits)
1000kΩ range: ±(0.0120% of reading + 4 digits)
10,000kΩ range: ±(0.1000% of reading + 4 digits)

90 days; 23°C ±5°C
1kΩ range: ±(0.0035% of reading + 5 digits)
10kΩ range: ±(0.0060% of reading + 5 digits)
100kΩ range: ±(0.0035% of reading + 6 digits)
1000kΩ range: ±(0.0135% of reading + 5 digits)
10,000kΩ range: ±(0.1000% of reading + 5 digits)

6 months; 23°C ±5°C
1kΩ range: ±(0.0040% of reading + 6 digits)
10kΩ range: ±(0.0065% of reading + 6 digits)
100kΩ range: ±(0.0040% of reading + 7 digits)
1000kΩ range: ±(0.0140% of reading + 6 digits)
10,000kΩ range: ±(0.1000% of reading + 6 digits)

1 year; 23°C ±5°C
1kΩ range: ±(0.0045% of reading + 7 digits)
10kΩ range: ±(0.0070% of reading + 7 digits)
100kΩ range: ±(0.0045% of reading + 8 digits)
1000kΩ range: ±(0.0145% of reading + 7 digits)
10,000kΩ range: ±(0.1000% of reading + 7 digits)

***Accuracy:** 2 wire k ohms

All accuracy specifications are the same as 4 wire k ohms except add 0.0004kΩ to all readings.

Table 1-1. Specifications (Cont'd).

INPUT CHARACTERISTICS

Maximum voltage generated across unknown:

< 5 volts for open circuit
< 4.7 volts for valid reading

Signal Source Driving Unknown (Nominal):

0.1kΩ, 1kΩ & 10kΩ ranges

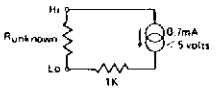

100kΩ

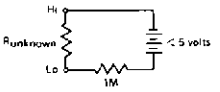

1000kΩ & 10,000kΩ ranges

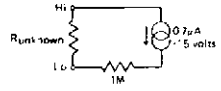

Overload Protection:

Non-Destructive — ±350V peak

Maximum Reading Rate:

60Hz Gate Length

	High Resolution Off	High Resolution On
Local	4.5 readings/sec.	2 readings/sec.
Remote	12 readings/sec.	3 readings/sec.

50Hz Gate Length

	High Resolution Off	High Resolution On
Local	4 readings/sec.	1.8 readings/sec.
Remote	11 readings/sec.	2.5 readings/sec.

AC VOLTAGE (RMS CONVERTER)

Ranges	Maximum Display
High Resolution On or Off	High Resolution On or Off
1V	1.49999V
10V	14.9999V
100V	149.999V
1000V	1000.00V

Range Selection: Manual, Automatic, or Remote

Function Selection: ACV or Fast ACV

PERFORMANCE

Temperature Coefficient: (0°C to 50°C) for inputs < 50kHz

AC coupled, input > 1% of full scale: ±(0.002% of reading + 2 digits)/°C
AC coupled, input < 1% of full scale: ±(0.002% of reading + 6 digits)/°C
AC/DC coupled: ±(0.002% of reading + 6 digits)/°C

Accuracy: ±[% of reading + digits or (% of range)][1]
(AC Coupling)[2]

FAST ACV[4] / ACV[4]	300Hz-20kHz / 30Hz-20kHz	20kHz-100kHz / 20kHz-100kHz	100kHz-250kHz[3] / 100kHz-250kHz[3]	250kHz-500kHz[3] / 250kHz-500kHz[3]	500kHz-1MHz[3] / 500kHz-1MHz[3]
24 hrs; 23°C±1°C	.04% + 40 dig. (.04%)	0.4% + 80 dig. (.08%)	1.8% + 200 dig. (.20%)	4% + 400 dig. (.40%)	5% + 2600 dig. (2.6%)
90 days; 23°C±5°C	.05% + 50 dig. (.05%)	0.5% + 100 dig. (.10%)	2.0% + 250 dig. (.25%)	5% + 500 dig. (.50%)	6% + 3100 dig. (3.1%)
6 mos; 23°C±5°C	.06% + 60 dig. (.06%)	0.6% + 130 dig. (.13%)	2.1% + 300 dig. (.30%)	5.1% + 600 dig. (.60%)	6.3% + 3500 dig. (3.5%)
1 year; 23°C±5°C	.07% + 70 dig. (.07%)	0.7% + 160 dig. (.16%)	2.2% + 350 dig. (.35%)	5.3% + 700 dig. (.70%)	6.6% + 3900 dig. (3.9%)

[1] Guard must be connected to low.
Specifications are only for input levels above 1% of range.
For AC coupled inputs < 1% of full scale; add 20 digits to above accuracy table except for AC coupled inputs above 50kHz and < 5% of full scale; add 170 digits to above accuracy table. See footnote 2 for AC/DC coupled inputs.

[2] For any AC/DC coupled input add (0.05% of reading + 20 digits) to above accuracy table, except for an AC/DC coupled input above 50kHz and < 5% of full scale, add 170 digits to above accuracy table.

[3] Frequencies of greater than 100kHz are specified for the 1V and 10V ranges only.

[4] Accuracy is not specified if the volt-hz product exceeds 10^7.

For inputs > 500V multiply the above tabled accuracy by $\frac{1500 + |Vin|}{1000}$

For inputs > 500V, accuracy is specified for a time period of < 2 minutes.

Crest Factor: 7:1 at full scale

Table 1-1. Specifications (Cont'd).

INPUT CHARACTERISTICS

Input Impedance:

Front Terminals—2MΩ ± 1% shunted by less than 100pF.
Rear Terminals—2MΩ ± 1% shunted by less than 75pF.

Maximum Input Voltage:

High to Low Terminals: ± 1414 volts peak (Subject to a 10^7 volt - Hz limitation)
Guard to Chassis: ± 500V peak
Guard to Low Terminal: ± 200V peak

Maximum Reading Rate:

60Hz Gate Length

	ACV	FAST ACV
Local	1.3 readings/sec.	4.5 readings/sec.
Remote	1.3 readings/sec.	13 readings/sec.

50Hz Gate Length

	ACV	FAST ACV
Local	1.1 readings/sec.	3.5 readings/sec.
Remote	1.1 readings/sec.	12 readings/sec.

Response Time:

ACV and FAST ACV
First reading to <0.1% of step size when triggered coincident with step change when on correct range. (For AC signals with no DC component.)

AC VOLTAGE (AVERAGE CONVERTER OPT. 001)

Ranges	Maximum Display
High Resolution On or Off	High Resolution On or Off
1V	1.49999V
10V	14.9999V
100V	149.999V
1000V	1000.00V

Range Selection: Manual, Automatic, or Remote

Function Selection: ACV or Fast ACV

PERFORMANCE

Temperature Coefficient: (0°C to 50°C)

±(0.002% of reading + 2 digits)/°C

Accuracy: ±[% of reading + digits or (% of range)][1]

FAST ACV[3] ACV[3]	300Hz-500Hz 30Hz-50Hz	500Hz-1kHz 50Hz-100Hz	1kHz-100kHz 100Hz-100kHz[2]	100kHz-250kHz[2] 100kHz-250kHz[2]
24 hrs; 23°C±1°C	0.47% + 70 dig. (.07%)	0.32% + 50 dig. (.05%)	0.09% + 25 dig. (.025%)	0.70% + 60 dig. (.06%)
90 days; 23°C±5°C	0.50% + 70 dig. (.07%)	0.35% + 50 dig. (.05%)	0.1% + 25 dig. (.025%)	0.75% + 60 dig. (.06%)
6 mos; 23°C±5°C	0.50% + 70 dig. (.07%)	0.40% + 60 dig. (.06%)	0.1% + 30 dig. (.03%)	0.75% + 70 dig. (.07%)
1 year; 23°C±5°C	0.50% + 70 dig. (.07%)	0.40% + 70 dig. (.07%)	0.12% + 35 dig. (.035%)	0.75% + 80 dig. (.08%)

[1]Guard must be connected to low.
On the 1000V range, add 0.01 ppm/volt-kHz.
Specifications are for input levels above 1/100th of range.

[2]Frequencies greater than 100kHz specified on 1 and 10V ranges only.

[3]Accuracy is not specified if the volt-hertz product exceeds 10^7.

Table 1-1. Specifications (Cont'd).

INPUT CHARACTERISTICS

Input Impedance:

Front Terminals – 2MΩ ± 1% shunted by less than 100pF.
Rear Terminals – 2MΩ ± 1% shunted by less than 75pF.

Maximum Input Voltage:

High to Low Terminals: ± 1414 volts peak (Subject to a 10^7 volt - Hz limitation)
Guard to Chassis: ± 500V peak
Guard to Low Terminal: ± 200V peak

Maximum Reading Rate:

60Hz Gate Length

	ACV	FAST ACV
Local	1.3 readings/sec.	4.5 readings/sec.
Remote	1.3 readings/sec.	13 readings/sec.

50Hz Gate Length

	ACV	FAST ACV
Local	1.1 readings/sec.	3.5 readings/sec.
Remote	1.1 readings/sec.	12 readings/sec.

Response Time:

ACV and FAST ACV
First reading to < 0.1% of step size when triggered coincident with step change when on correct range (for AC signals with no DC component).

MATH

Scale: $\left(\frac{X - Z}{Y}\right)$

X is present reading. Y and Z are previously entered readings, numbers entered from the front panel or values entered by external program.

Maximum Number: (Entered or Displayed)

± 199,999.9

ACCURACY:

± (ACCURACY OF X READING ± 1 DIGIT OF DISPLAYED ANSWER)[1]

[1] This assumes no "Y" or "Z" error.

% Error: $\left(\frac{X - Y}{Y}\right) \times 100\%$

X is present reading. Y is previously entered reading, or number entered from the front panel or by external program.

Maximum Number: (Entered or Displayed)

± 199,999.9

ACCURACY:

± (ACCURACY OF X READING ± 1 DIGIT OF DISPLAYED ANSWER)[1]

[1] This assumes no "Y" error.

Table 1-2. Typical Operating Characteristics.

Range Selection: Manual, Automatic, or Remote

Function Selection:
DC Volts
AC Volts (ACV or FAST ACV)
OHMS (2 wire kilohm or 4 wire kilohm)
TEST

NORMAL MODE REJECTION (50 Hz OPERATION)

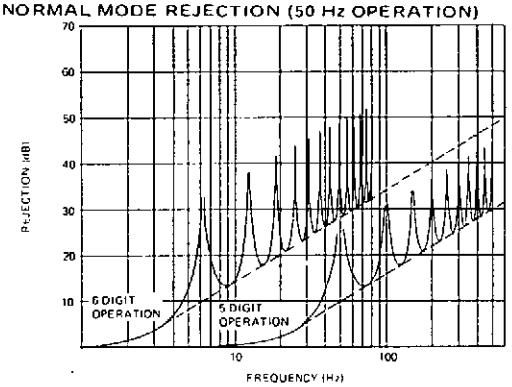

NORMAL MODE REJECTION (60 Hz OPERATION)

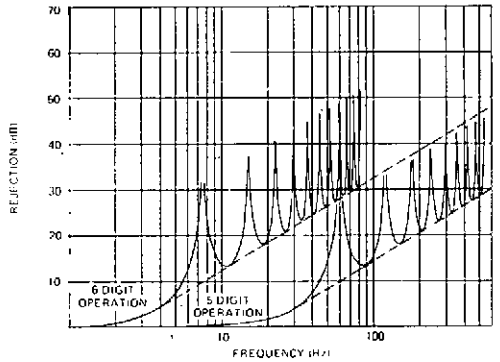

$$\text{Normal Mode Rejection} = 20 \log \left| \frac{\pi f T}{\sin \pi f T} \right|$$

$$\text{Effective Noise Bandwidth} = \frac{1}{2T}$$

T = 1/60 sec for 5 digit 60 Hz Operation
T = 2/15 sec for 6 digit 60 Hz Operation
T = 1/50 sec for 5 digit 50 Hz Operation
T = 4/25 sec for 6 digit 50 Hz Operation

COMMON MODE REJECTION (1 KILOHM IMBALANCE)

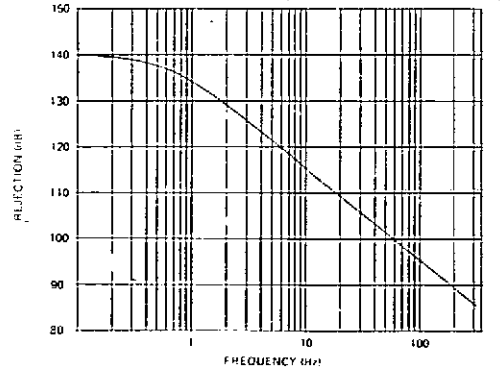

EFFECTIVE COMMON MODE REJECTION (50 Hz OPERATION)

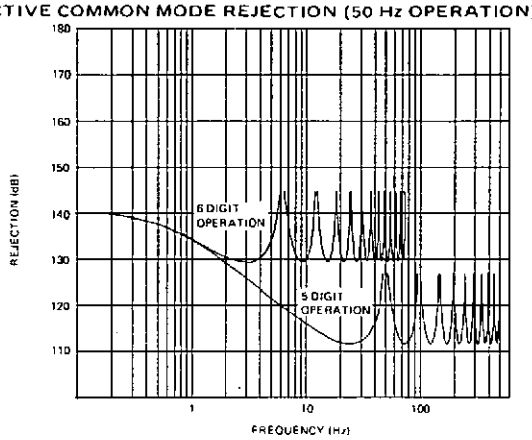

EFFECTIVE COMMON MODE REJECTION (60 Hz OPERATION)

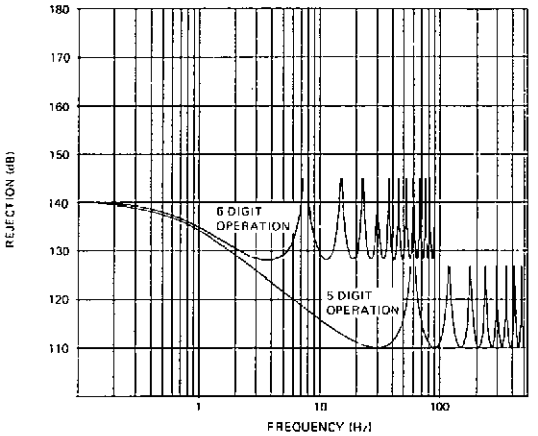

Typical HP-IB Handshake Times:
Accept Data — (3455A addressed to listen or ATN true)
500 μsec per character typical (Ø delay source)

Output Data — (3455A addressed to talk)
250 μsec per charcter typical (Ø delay acceptor)

General (Auto Cal must be on for 75 seconds to meet all specifications)

Overload Indication: OL
Operating Temperature: 0°C to 50°C
Warmup Time: One hour to meet all specifications
Humidity Range: <95% R.H., 0°C to 40°C
Storage Temperature: −40°C to +75°C
Power: 100/120/240 V +5%, −10% 48 Hz to 400 Hz line operation < 60 VA
220 V ± 10% 48 Hz to 400 Hz line operation < 60 VA
Dimensions: 88.9 mm high x 425.5 mm wide x 527.1 mm deep (3 1/2" high x 16 3/4" wide x 20 3/4" deep)
Weights: Net — 9 kg (21 lbs.)
Shipping — 12 kg (26 lbs.)

Table 1-3. Recommended Test Equipment.

Instrument	Critical Specification	Recommended Model	Use
DC Voltage Standard	Voltage: 10 mV to 1000 V Accuracy: ± .005%	Systron Donner Model M107	PAT
AC Calibrator	Frequency: 20 Hz to 100 kHz Output Level: 100 mV to 1000 V Accuracy: ± .1% Voltage Stability (6 mos.) ± .02%	-hp- Model 745A AC Calibrator -hp- Model 746A High Voltage Amplifier	PAT
Test Oscillator	Frequency: to 250 kHz Output: 3 V rms into 50 Ω Frequency Response ± .25%	-hp- Model 652A Test Oscillator	P
Resistance Decade	Resistance: 100 Ω to 10 MΩ Accuracy: ± .004%	Gen Rad Model GR 1433-Z Decade Resistor	PAT
DC Null Voltmeter	Voltage Range: 1 μV to 10 V	-hp- Model 419A	PAT
Reference Divider	Division Ratio Accuracy ± .001% Output Voltage Range – 1 V to 1 kV	Fluke Model 750A Reference Divider	PA
DC Transfer Standard	Output Voltages: 1 V, 1.018 V, 1.019 V, 10 V Accuracy: ± 5 ppm Stability: ± .001% (30 days)	Fluke Model 731A DC Transfer Standard	PA
Electronic Counter	50 Hz to 60 Hz	-hp- Model 5300A/5302A Measuring System	P
Resistance Standard	Resistance: 1 kΩ Accuracy: ± .0005% Resistance: 100 K Accuracy: ± .002%	Guildline Model 9330/1 K or 9330A/1 K Guildline Model 9330/100K	A
Bus System Analyzer	HP-IB Control Capability	-hp- Model 59401A Bus System Analyzer	T
Calculator	HP-IB Control Capability must serve as printer for 3455A Output data.	-hp- Model 9825A	OT
Oscilloscope	Bandwidth: DC to 10 MHz Sweep Time: 0.1 μs to 1 sec/div Sensitivity: 1 V/div	-hp- Model 180C/D Oscilloscope with 1801A and 1821A plug-in units.	T
Digital Voltmeter	Voltage Range: 10 mV to 1000 V Resolution: 10 μV	-hp- Model 3490A	PAT
Resistors	Resistances: 1 kΩ ± 10% 10 kΩ ± 0.1% 1 MΩ ± 0.1%	-hp- Part No. 0684-1021 0698-4157 0698-6369	P
Signature Analyzer		-hp- Model 5004A	T

P = Performance Checks
A = Adjustments
T = Troubleshooting
O = Operators Check

SECTION II
INSTALLATION

2-1. INTRODUCTION.

2-2. This section contains information and instructions necessary to install and interface the Model 3455A Digital Voltmeter. Also included are initial inspection procedures, power and grounding requirements, environmental information, and repackaging instructions.

2-3. INITIAL INSPECTION.

2-4. This instrument was carefully inspected both mechanically and electrically before shipment. It should be free of mars and scratches and in perfect electrical order. The instrument should be inspected upon receipt for damage that might have occurred in transit. If the shipping container or cushioning material is damaged, it should be kept until the contents of the shipment have been checked for completeness and the instrument has been mechanically and electrically checked. Procedures for testing electrical performance of the 3455A are given in Section IV. If the contents are incomplete, if there is mechanical damage or defect, or if the multimeter does not pass the Performance Tests, notify the nearest Hewlett-Packard Office. (A list of the -hp- Sales and Service Offices is presented at the back of the manual.) If the shipping container is damaged, or the cushioning material shows signs of stress, notify the carrier as well as the Hewlett-Packard Office. Save the shipping materials for the carrier's inspection.

2-5. PREPARATION FOR USE.

2-6. Power Requirements.

2-7. The Model 3455A requires a power source of 100, 120, 220, or 240 V ac (+5% - 10%), 48 Hz to 400 Hz single phase. Maximum power consumption is 60 VA.

2-8. Line Voltage Selection.

2-9. Before connecting ac power to the 3455A, make sure the rear panel line selector switches are set to correspond to the voltage of the available power line as shown in Figure 2-1. Also, be sure the proper fuse is installed. The multimeter is shipped with the line voltage and fuse selected for 120 V ac operation.

CAUTION

Be sure the 50 — 60 Hz rear panel switch is set for the proper line frequency for your location.

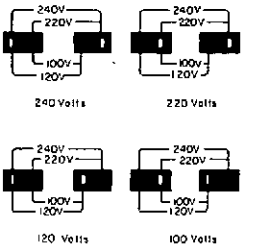

NOMINAL VOLTAGE	OPERATING RANGE -10%, +5% of nominal	FUSE
100 volts	90 to 105 volts	0.5 A
120 volts	108 to 126 volts	0.5 A
220 volts	198 to 231 volts	0.25 A
240 volts	216 to 252 volts	0.25 A

Figure 2-1. Line Voltage Selection.

2-10. Power Cable.

2-11. Figure 2-2 illustrates the standard configurations used for -hp- power cables. The -hp- part number directly below each drawing is the part number for a power cable equipped with a connector of that configuration. If the appropriate power cable is not included with the instrument, notify the nearest -hp- Sales and Service Office and the proper cable will be provided.

2-12. Grounding Requirements.

2-13. To protect operating personnel, the National Electrical Manufacturer's Association (NEMA) recommends that the instrument panel and cabinet be grounded. The Model 3455A is equipped with a three conductor power cable which, when plugged into an appropriate receptacle, grounds the instrument.

2-14. Bench Use.

2-15. The Model 3455A is shipped with plastic feet and tilt stands installed and is ready for use as a bench instrument. The plastic feet are shaped to permit "stacking" with other full-module Hewlett-Packard instruments. The tilt stands permit the operator to elevate the front panel for operating and viewing convenience.

2-16. Rack Mounting.

2-17. The Model 3455A may be rack mounted by adding rack mounting kit Option 908 or Option 909. Option 908 contains the basic hardware and instructions for

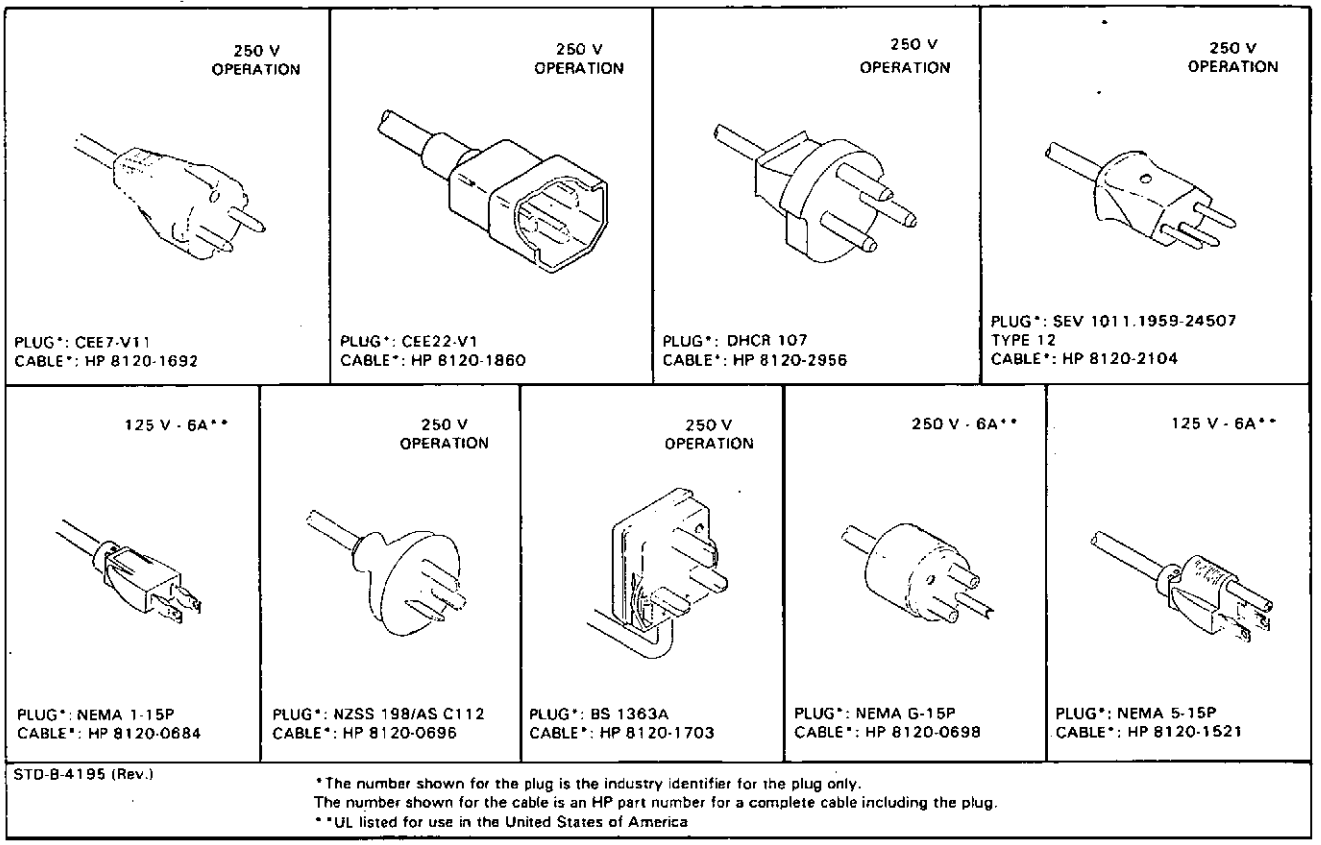

Figure 2-2. Power Cord Configurations.

rack mounting; Option 909 adds front handles to the basic rack mount kit. The rack mount kits are designed to permit the Multimeter to be installed in a standard 19 inch rack. When rack mounting, additional support must be provided at the rear of the instrument. Be sure that the air intake at the rear of the instrument is unobstructed.

2-18. Interface Connections.

2-19. The Model 3455A is compatible with the Hewlett-Packard Interface Bus (HP-IB).

NOTE

HP-IB is Hewlett-Packard's implementation of IEEE std 488-1975, "Standard Digital Interface for Programmable Instrumentation".

The Multimeter is connected to the HP-IB by connecting an HP-IB interface cable to the 24-pin connector located on the rear panel. Figure 2-3 illustrates typical HP-IB system interconnections and shows the 10631A/B/C HP-IB Interface Cable connectors. Each end of the cable has both a male and female connector to simplify interconnections of instruments and cables. As many as 15 instruments can be connected by the same interface bus; however, the maximum length of cable that can be used to connect a group of instruments must not exceed 2 meters (6.5 ft.) times the number of instruments to be connected, or 20 meters (65.6 ft.), whichever is less.

2-20. Address Selection. The HP-IB address switch, located on the rear panel, permits the user to set the "talk" and "listen" address of the instrument. The talk and listen address is a 7-bit code which is selected to provide a unique address for each bus instrument. The 3455A normally leaves the factory with the address switch set to a "Listen" address of 6 and a "talk" address of V. The address switch also allows selection of a "talk-only" mode. Refer to Paragraph 3-42 for address selection instructions.

2-21. External Trigger. A BNC connector, located on the rear panel, is provided for an external trigger input. The trigger input is to be driven with TTL level signals.

2-22. ENVIRONMENTAL REQUIREMENTS.

WARNING

To prevent electrical shock or fire hazard, do not expose the instrument to rain or moisture.

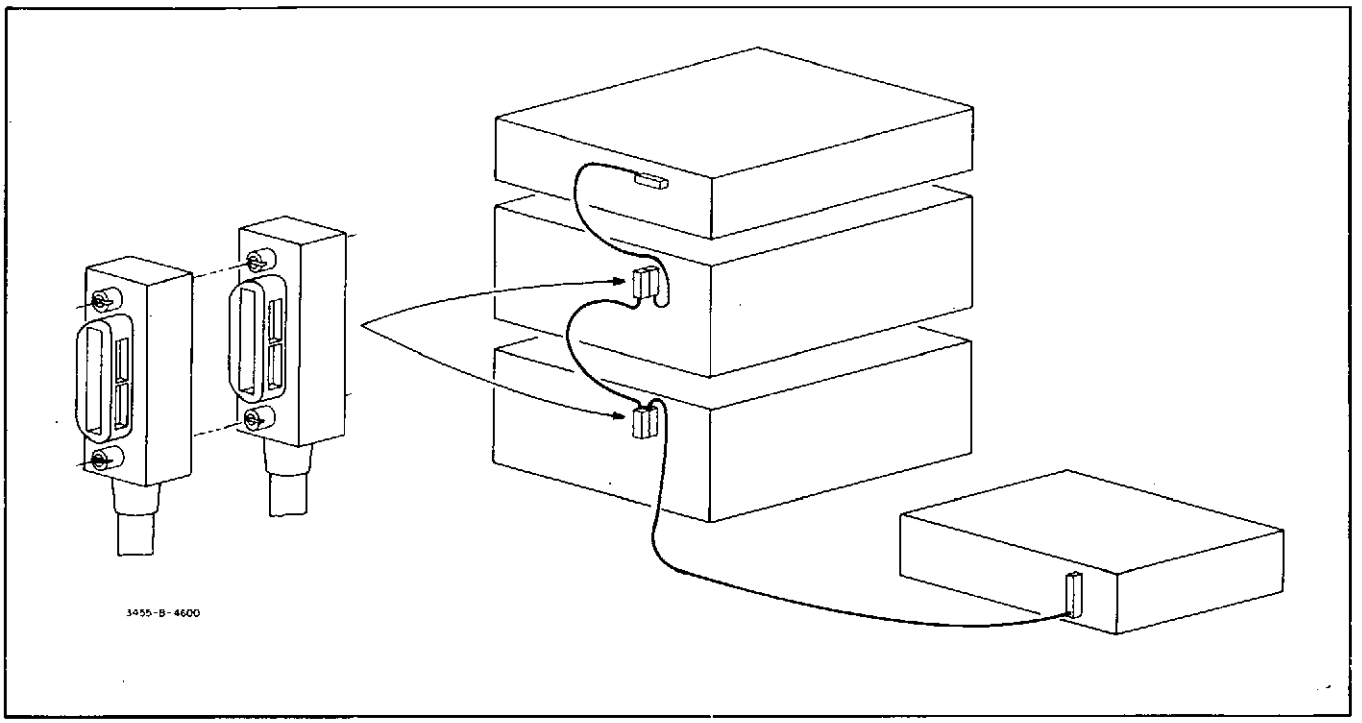

Figure 2-3. Typical HP-IB System Interconnections.

2-23. Operating and Storage Temperature.

2-24. In order to meet the specifications listed in Table 1-1, the instrument should be operated within an ambient temperature range of 23°C ±5°C (73°F ±9°F). The instrument may be operated within an ambient temperature range of 0°C to +55°C (+32°F to +131°F) with degraded accuracy.

2-25. The instrument may be stored or shipped where the ambient temperature range is within −40°C to +75°C (−40°F to +167°F). However, the instrument should not be stored or shipped where temperature fluctuations cause condensation within the instrument.

2-26. Humidity.

2-27. The instrument may be operated in environments with relative humidity of up to 95%. However, the instrument must be protected from temperature extremes which cause condensation within the instrument.

2-28. Altitude.

2-29. The instrument may be operated at altitudes up to 4572 meters (15,000 feet).

2-30. REPACKAGING FOR SHIPMENT.

NOTE

If the instrument is to be shipped to Hewlett-Packard for service or repair, attach a tag to the instrument identifying the owner and indicating the service or repair to be accomplished. Include the model number and full serial number of the instrument. In any correspondence, identify the instrument by model number and full serial number. If you have any questions, contact your nearest -hp- Sales and Service Office.

2-31. The following is a general guide for repackaging the instrument for shipment. If the original container is available, place the instrument in the container with appropriate packing material and seal well with strong tape or metal bands. If the original container is not available, proceed as follows:

a. Wrap instrument in heavy paper or plastic before placing in an inner container.

b. Place packing material around all sides of instrument and protect panel face with cardboard strips or plastic foam.

c. Place instrument and inner container in a heavy carton and seal with strong tape or metal bands.

d. Mark shipping container "DELICATE INSTRUMENT", "FRAGILE", etc.

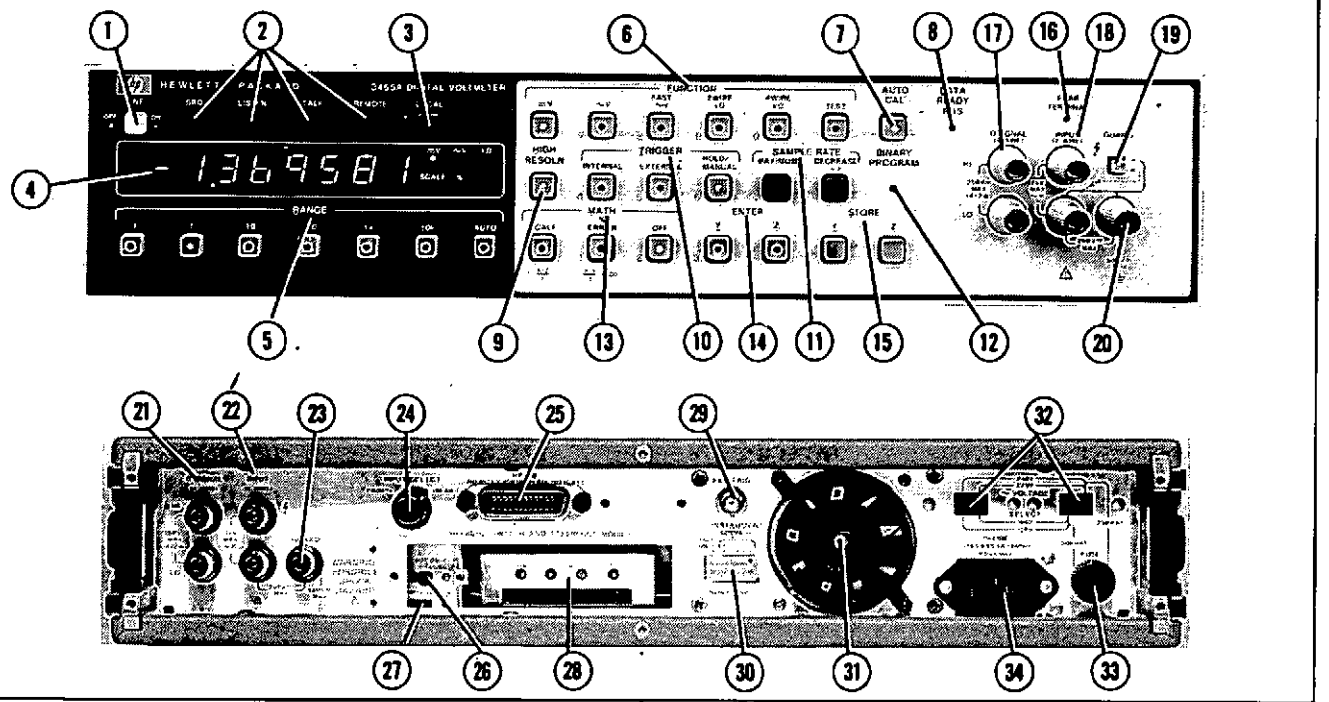

FRONT PANEL

(1) Line Switch, push on/push off

(2) HP-IB* status indicators:
SRQ - indicates that the 3455A "requires service" from the controller. Refer to Paragraph 3-78.
LISTEN – lights when the 3455A is addressed to "listen".
TALK – lights when the 3455A is addressed to "talk".
REMOTE – lights when the 3455A is under HP-IB control.

(3) LOCAL switch – permits the operator to return the instrument to local (front panel) control.

(4) Display – Indicates polarity and amplitude of the measurement. Measurement results are presented in either 5-1/2 digits or 6-1/2 digits depending upon whether the HIGH RESOLUTION feature is off or on. An LED in the upper left corner of the display indicates sample rate of the 3455A. Five LED's, located to the right of the display, indicate whether the display is presenting DC Voltage, AC Voltage, Ohms, Scale or % error measurement results.

(5) Range Selection Keys – permit selection of ranges as follows:
DC Volts: .1 V, 1 V, 10 V, 100 V, 1 kV, AUTO
AC Volts: 1 V, 10 V, 100 V, 1 kV, AUTO
Ohms: .1 K, 1 K, 10 K, 100 K, 1,000 K, 10,000 K, AUTO
LED's located in the center of the keys indicate which range is selected.

(6) Function Selection Keys – DC Volts, AC Volts, FAST AC Volts, 2 WIRE kΩ, 4 WIRE kΩ, and TEST. LED's located in the center of the keys indicate which function is selected.

(7) Auto Cal switch - allows the Auto-Cal feature to be turned on or off. LED in center of Key indicates Auto-Cal on. Refer to Paragraph 3-29.

(8) Data Ready Request Indicator - lights when the Data Ready Request feature is programmed on. Refer to Paragraph 3-65.

(9) High Resolution switch – switches display from 5-1/2 digit presentation to 6-1/2 digit presentation. An LED located in the center of the key indicates High Resolution on when lit.

(10) Trigger Selection Keys – permits selection of INTERNAL, EXTERNAL, or HOLD/MANUAL trigger. Each key has an LED which lights to indicate the trigger source selected.

(11) Sample Rate Controls – permit selection of maximum sample rate or the present sample rate divided by 2. The maximum sample rate may be divided by 2 up to 6 times for a minimum sample rate of: $\frac{\text{maximum sample rate}}{64}$

(12) Binary Program Indicator - indicates when the 3455A is operating in the Binary Program mode. Refer to Paragraph 3-66.

(13) Math Controls – Select SCALE $(\frac{X - Z}{Y})$, % ERROR $(\frac{X - Y}{Y} \times 100)$, or MATH OFF. The Math feature selected is indicated by an LED located in the key (Paragraph 3-19).

(14) ENTER controls - Recall the number stored in the Y or Z register to the display, also "shifts" the front panel keyboard to permit entry of new data to be stored in the Y or Z registers (Paragraph 3-23).

(15) STORE Controls - The Store controls transfer the number presently being displayed into the Y or Z register (Paragraph 3-23).

(16) Rear Terminal Indicator - indicates when the rear input terminals have been selected.

Figure 3-1. Front and Rear Panel Features.

SECTION III
OPERATING INSTRUCTIONS

3-1. INTRODUCTION.

3-2. This section contains information and instructions necessary for operation of the Model 3455A Digital Voltmeter. Included is a description of operation characteristics, a description of the operating controls and indicators, and functional checks to be performed by the operator.

3-3. OPERATING CHARACTERISTICS.

3-4. Turn-On and Warm-Up.

3-5. Before connecting ac power to the 3455A, make certain the rear panel line selector switches are set to correspond to the voltage and frequency of the available power line and that the proper fuse is installed for the voltage selected. For rated measurement accuracy, the 3455A should be allowed to warm up for at least one hour.

3-6. Self Test Operation.

3-7. The internal test function of the 3455A verifies the operation of the dc analog circuitry, inguard and outguard logic circuitry, and the front panel indicators and display. The primary test of the dc analog circuitry is the measurement of various Auto-Cal constants. A logic check is also performed, when all the cal constant measurements are taken. The logic check consists of a dummy cal constant calculation made in the outguard logic of the instrument. When all these measurements and calculations are completed, the 3455A will display +.8.8.8.8.8.8.8. and the self-test operation will start again. In order to bring the instrument out of this mode, any other function button must be pressed.

3-8. In the event of a cal constant failure, the Self-Test operation will stop and the failing cal constant's number will be displayed (an integer number from 13 to 0). If the dummy calculation fails, a non integer number is displayed (e.g., 9.998 or 10.002 etc.).

3-9. The Self-Test function can be remotely programmed, as described in the programming portion of this section. The 3455A will output a 10 upon a successful completion of the test and if addressed to "talk." If the dummy calculation fails, the answer of the dummy calculation will be the output (9.998 or 10.002 etc.). If any auto-cal constants fail, the 3455A will not output any readings, (times out).

NOTE

The self test feature does not test operation of the ohms or ac sections nor the measurement accuracy of the 3455A.

3-10. DC Voltage Measurement.

3-11. The Model 3455A measures dc voltage from 1 microvolt to 1000 volts in five ranges extending from .1

(17) Ohms Signal Terminals - supplies drive signal for 4-WIRE Ohms measurements (Paragraph 3-12).

(18) Input Terminals

(19) GUARD switch - internally connects the Guard terminal to the LO Input terminal (for front panel operation only, Paragraph 3-41).

(20) GUARD Terminal

REAR PANEL

(21) Ohms Signal Terminals

(22) Input Terminals

(23) Guard Terminals

(24) Front/Rear INPUT SELECT switch

(25) HP-IB* Connector - see Paragraph 2-18 and 3-48.

(26) AC or AC/DC Input Selection switch - refer to Paragraph 3-14.

(27) Line Frequency Selection Switch — must be set to correspond to the power line frequency (50 Hz or 60 Hz).

(28) Reference Module

(29) EXTERNAL TRIGGER Input Connector

(30) HP-IB* Address Selection Switch - refer to Paragraph 3-53.

(31) Cooling Fan

(32) Power Line Voltage Selection Switches — refer to Paragraph 2-8.

(33) Fuse — 90 V to 126 V — 0.5 amp, 198 V to 252 V — 0.25 amp.

(34) AC Power Connector.

*HP-IB is Hewlett-Packard's implementation of IEEE Std. 488-1975, "Standard Digital Interface for Programmable Instrumentation".

Figure 3-1. Front and Rear Panel Features (Cont'd).

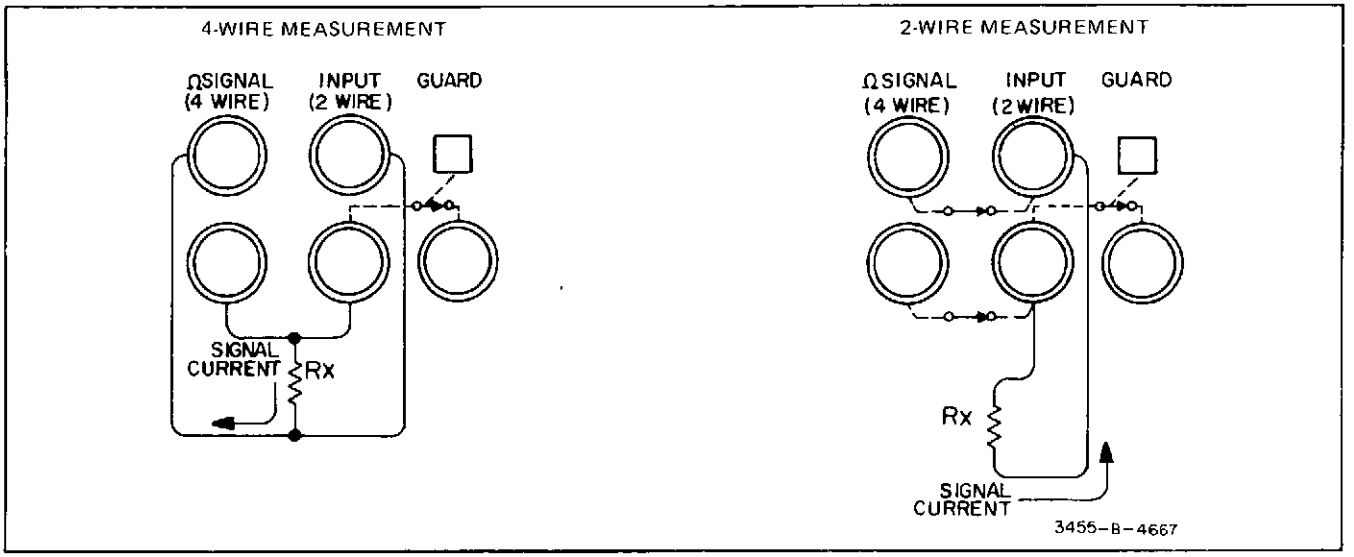

Figure 3-2. Ohmmeter Measurement Connections.

volt full-scale to 1000 volts full-scale. Measurement results are presented in 5-1/2 digits during normal operation or in 6-1/2 digits when the 3455A is set to the High Resolution mode. All ranges except the 1000 volt range have 50% overrange capability and are overload protected from input voltages up to ± 1000 volts. Input resistance in the dc function is greater than 10^{10} ohms on the .1 V, 1 V, and 10 V ranges and equal to 10 megohms on the 100 V and 1000 V ranges. Refer to Table 1-1 for DC Accuracy specifications.

3-12. Resistance Measurement.

3-13. The Model 3455A measures resistance from 1 milliohm to 15 megohms in six ranges extending from .1 kilohms ful scale to 10,000 kilohms full scale. Measurement results are presented in 5-1/2 digits during normal operation or in 6-1/2 digits when the 3455A is set to the High Resolution mode. The only exception is that the .1 V range can only take a measurement in the 5-1/2 digit mode. Resistance may be measured in "4-WIRE" configuration for optimum accuracy or "2-WIRE" configuration may be selected for measurement convenience. Figure 3-2 shows proper connections for making resistance measurements. The nominal output signal current on the .1 kilohm, 1 kilohm and 10 kilohm ranges is .7 mA. The nominal output current on the 1000 kilohm and 10,000 kilohm ranges is .7 microamp. Maximum output voltage is limited to less than 5 volts on all ranges. Refer to Table 1-1 for ohm accuracy specifications.

3-14. AC Voltage Measurement.

3-15. The -hp- Model 3455A offers a choise of true RMS (standard unit) or average responding ac convertors (Option 001). Both methods measure ac voltages from 10 microvolts to 1000 volts in four ranges extending from 1 volt to 1000 volts ranges. All ranges, except the 1000 volts range, have 50% overrange capability and are protected from input voltage components up to 1000 volts RMS. Readings taken in the ac function are display in the 5-1/2 digit mode only. Input impedance of both convertors is 2 megohms in parallel with < 75 pF for rear terminal input and < 90 pF for front terminal input. In addition to the normal ac volts function, the 3455A also has a fast ac volts function. The fast ac function has a faster ac reading rate than the normal ac function.

3-16. The frequency response of the true RMS convertor is from 30 Hz to 1 MHz in the normal ac volts function and from 300 Hz to 1 MHz in the fast ac volts function. Both ac signals or ac plus dc signals (ac signals superimposed on a dc level) can be measured by the true RMS convertor. Selection of the ac or ac + dc inputs are chosen by a switch located behind the rear panels reference cover. Refer to Table 1-1 for accuracy specifications of each ac mode.

3-17. The frequency response of the average converter is from 30 Hz to 250 Hz in the normal ac volts function and from 300 Hz to 250 kHz in the fast ac volts function. Only ac signals (no dc component) can be measured by the average converter. Refer to Table 1-1 for accuracy specification of each ac mode.

3-18. In order to get accurate ac readings (especially with high voltage inputs at high frequencies), the low input terminal (front and rear) should be connected to the guard terminal (front and rear). Refer to paragraph 3-39 for guarding information.

NOTE

The front panel guard pushbutton applies only for front panel inputs. Be sure to wire rear panel guard connections yourself, if using the rear panel input terminals.

3-19. Math Feature.

3-20. The math feature of th 3455A allows the measurement value to be offset and/or scaled by known values or to be expressed in percent of a reference value.

3-21. Scale Mode. The scale mode of the math feature is described by the formula: result = $\frac{x-z}{y}$ where x is the measurement value, z is the offset value, and y is the scale factor. This mode allows the measurement value to be modified by the addition, subtraction, multiplication or division of a known value. Addition and subtraction are performed by entering the number to be added or subtracted in "z" and entering 1 in "y". The scale formula then becomes: result = $\frac{x - (\pm z)}{1} = x - (\pm z)$. Division is performed by entering Ø in "z" and the divisor value in "y." The scale formula then becomes: result = $\frac{x - Ø}{y} = \frac{x}{y}$. Multiplication is performed by dividing the measurement value by the inverse of the multiplier value; that is, multiplication is performed by dividing by a fraction. The scale formula becomes: result = $\frac{x - Ø}{1/y} = xy$. As an example: to multiply by 10, divide by the inverse of 10 which is 1/10 or .1. Various examples using the scale mode are as follows:

a. *Current Measurement:* Accurate current measurements can be made by using a low value resistor shunting the 3455A's input terminals. The value of the resistor is then entered in the "y" register (see Paragraph 3-22), and zero is entered in the "z" register With the resistor connected at the input terminal and the instrument set in the voltage mode, current measurements can now be made. You can do this by connecting the input across the resistor and measuring the voltage drop across the resistor. This voltage drop is proportional to the current through the resistor. By switching the 3455A to the scale mode, the reading becomes an accurate current reading in milliamps. Since the resistor value is in kilo ohms (R) and stored in "y", and since zero is stored in "z", the scale equation becomes:

$$\frac{x-z}{y} = \frac{V-0}{R} = \frac{V}{R} = \text{current in milliamps}$$

where R = Resistor across the input terminals
V = Voltage drop across the resistor

b. *Temperature Measurement:* A temperature measurement can be made by using a line or resistive temperature sensor.

Assume that the sensor has a resistance of 1 kilohm at 25°C and changes 5900 ppm/°C. At Ø°C the sensor would have a resistance of 852.5 ohm (1 kilohm - [5.9 ohms] 25). This number is divided by 1000 since the 3455A measurement results are expressed in kilohm and is entered in the "z" register to remove the offset at 0°C. The measurement result of the 3455A is scaled to read directly in degrees centigrade by solving the equation for the value of "y". This is done where the results of the equation are equal to 25°C since the sensor resistance is specified at that temperature. The scale equation becomes:

$$25 = \frac{x-z}{y} = \frac{1\text{ K} - .8525\text{ K}}{y} = \frac{.1475\text{ K}}{y}$$

solving for y: $y = \frac{.1475\text{ K}}{25} = .0059$ with this number entered in the "y" register, the 3455A measurement result will be presented directly in °C.

c. *Accurate 2 Wire Ohm Measurement:* When trying to make an accurate 2 wire ohm measurement, the input lead resistance and the internal resistance of the 3455A should be subtracted out from the reading. This is done by setting the instrument to the desired range and short the input leads at the measuring point. Store a 1 in "y" and store the input lead resistance reading in "z". Open the input leads and connect the unknown resistor to the leads. With the 3455A set in the Scale mode, the value of the unknown resistor is displayed without the input lead resistance. Since a 1 is stored in "y" and the lead resistance (R) is stored in "z", the scale equation becomes:

$$\frac{x-z}{Y} = \frac{x-R}{1} = \text{unknown resistance in ohms}$$

where x = total measured resistance including R
R = lead resistance

d. *Limit Testing:* The Scale mode of the 3455A can also be used to do Limit Testing. This can be accomplished since the largest number which can be displayed is +200,000 and the smallest number is -200.00. If the magnitude of the display exceeds 200,000, either a "+LL" or a "-LL" is displayed. Therefore, the "y" and "z" constants must be chosen so that when "x" (the reading) is equal to the upper limit, the display is + 200,000 and when "x" is equal to the lower limit, the display is -200,000. This can be accomplished as follows:

When x = the Lower Limit, the DISPLAY should = -200,000

When x = the Upper Limit, the DISPLAY should = + 200,000

therefore, $-200{,}000 = \frac{\text{Lower Limit} - z}{y}$

and $+200{,}000 = \frac{\text{Upper Limit} - z}{y}$

This leaves two equations to solve for the unknown "y" and "z" constants. The two constants can be found the following way:

$$\begin{aligned} -200{,}000\,(y) &= \text{Lower Limit} - z \\ +200{,}000\,(y) &= \text{Upper Limit} - z \\ \hline 0 &= \text{Lower Limit} + \text{Upper Limit} - 2Z \\ & \quad \text{(add these two equations)} \end{aligned}$$

$$\text{therefore, } z = \frac{\text{Upper Limit} + \text{Lower Limit}}{2}$$

$$200{,}000 = \frac{\text{Upper Limit} - z}{y}$$

$$200{,}000\,(y) = \text{Upper Limit} - \frac{\text{Upper Limit} + \text{Lower Limit}}{2}$$

$$= \frac{\text{Upper Limit} - \text{Lower Limit}}{2}$$

$$\text{and, } \quad y = \frac{\text{Upper Limit} - \text{Lower Limit}}{400{,}000}$$

The following is an example of how to use this math technique. In this example a DC voltage is measured and compared with a Lower Limit of 10 volts and an Upper Limit of 30 volts:

$$y = \frac{\text{Upper Limit} - \text{Lower}}{400{,}000} = \frac{30 - 10}{400{,}000} = .00005$$

$$z = \frac{\text{Upper Limit} + \text{Lower Limit}}{2} = \frac{30 + 10}{2} = 20$$

By entering .00005 into the "y" register and 20 into the "z" register, and then pushing the SCALE and DCV buttons, the 3455A becomes a limit testing DVM. If the input exceeds 30 volts a "+ LL" is displayed, and if the input is less than 10 volts a "-LL" is displayed. If the input is within the limits set, a number is displayed.

3-22. % Error Mode. The % error mode of the math feature is described by the formula:

$$\text{result in: } \% = \frac{x-y}{y} * 100$$

where "x" is the present measurement value and "y" is the reference value. An application of this feature might be an inspection test of resistors. This nominal resistor value would be entered in the "y" register in kilohm (3455A) resistance measurements are presented in kilohm). As an example, assume the test is made on a group of 750 ohm resistors with a tolerance of 5%. The nominal resistor value (750 ohms) is entered in the "y" register as .750. The % error equation becomes: result in $\% = \frac{x-.750}{.750} \times 100$. A resistor with an actual value of 790 ohms would give a measurement result of: $\%\ \text{error} = \frac{.790-750}{750} \times 100 = 5.33333\%$, indicating the resistor is out of tolerance by .33333%.

3-23. Enter and Store.

3-24. The "Y" and "Z" ENTER keys have two functions. When one of the enter keys is pressed, the number presently stored in the respective memory register is displayed on the front panel readout. This allows the operator to check the contents of the "Y" or "Z" memory registers. Pressing the enter key also "shifts" the front panel keyboard, disabling all keys except those labeled in blue. These keys can now be used to enter the desired values to be stored in the "Y" or "Z" memory registers. As the value is entered it is displayed on the front panel readout. Numerical values from .000000 to + or - 199,999.9 may be entered in either the Y or Z registers.

3-25. The STORE keys are used to transfer the number presently being displayed in the "Y" or "Z" memory registers and to return the voltmeter to normal operation.

3-26. The following describes how the ENTER and STORE features may be used:

a. To view the value presently in memory, press the ENTER key of the appropriate register (ENTER Y or ENTER Z). To return this number to memory, press the STORE key of the appropriate register.

b. To enter a new number, press the ENTER key of the register to receive the number. Enter the desired number into the display by pressing the keys labeled in blue. Store the number entered by pressing the STORE key of the appropriate register.

c. To enter a measurement value presently being displayed, press the STORE key of the desired register (Y or Z).

NOTE

The operation of the ENTER and STORE keys are not mutually exclusive. That is, the number being displayed may be stored in either the Y or Z register independently of the register selected by the ENTER keys.

3-27. High Resolution Mode.

3-28. When the 3455A is used in the HIGH RESOLUTION mode, the instrument changes from a 5-1/2 digit measurement to a 6-1/2 digit measurement. This changes the measurement resolution from 10 parts/1.5 million (5-1/2 digit mode) to 1 part/1.5 million (6-1/2 digit mode). The integration period will also change from 1/60 second (1/50 second for 50 Hz operation) to 8/60 second (8/50 second for 50 Hz operation). The High Resolution mode cannot be used in the AC mode or the .1 V DC and 1 K ohm ranges. The reading rate in the DC and Ohms mode will also increase when the High Resolution function is turned off. Table 3-1 gives the various reading rates of the DC and Ohms functions

with High Resolution turned on or off.

3-29. Auto-Cal.

3-30 The purpose of the AUTO-CAL feature is to eliminate offsets, gain non-linearity, and drift which maybe present in the analog measuring circuits of the 3455A. This is accomplished by measuring the offset and gain errors and then mathematically correcting the measurement reading to exclude them. Each of the gain and error measurements, called Auto-Cal constants, are stored in the "memory" by the 3455A's main controller. These Auto-Cal constants are usually taken between each sample of the instrument and are updated each time a new cal constant measurement is made.

3-31. The reading rate of the 3455A increases when the Auto-Cal feature is turned off. Table 3-1 gives the reading rate of the various functions with Auto-Cal on or off.

3-32. The last set of constants are used to correct measurements, when the Auto-Cal mode is turned off. As long as the input amplifier offsets, gain linearity and drift do not vary the 3455A should remain within it's accuracy specifications. The time period over which these parameters will not change may vary from instrument to instrument. When the Auto-Cal function is disabled to obtain faster reading rates, it is recommended to periodically return the 3455A to the Auto-Cal mode in order to update the cal constants. This can be done after a block of readings have been taken or when the instrument is not in use. The instrument will then update the cal constants for accurate measurements. Allow about 6 seconds for updating the cal constants, if the 3455A is in the Hold mode.

3-33. Trigger.

3-34. The 3455A has three trigger modes. INTERNAL, EXTERNAL, and HOLD/MANUAL. The following is an explanation of each trigger mode.

a. *Internal Trigger:* This trigger is generated internally and triggers the 3455A to take a reading, after the previous operation is completed (a reading or Auto-Cal measurement). This trigger mode is entered when the instrument is turned on, when the Internal Trigger button is pressed, or a Device Clear message is remotely sent.

b. *External Trigger:* When the 3455A is the External Trigger mode, the user can trigger the instrument from an external trigger pulse. This trigger pulse has to be applied to the rear External Trigger Connector and should have a negative TTL edge and must be at least 3 microseconds wide. The instrument will take a measurement, when this trigger pulse is received. After the measurement is taken, the 3455A can be triggered again for a new reading. If the instrument is triggered while making a measurement, the new trigger is delayed. After the first measurement cycle is completed, the delayed trigger will iniate a second measurement cycle. Only one trigger will be delayed during any given measurement cycle. Any extra triggers sent during this cycle will be ignored.

c. *Hold/Manual Trigger:* This trigger is similar to the External Trigger, except it can be executed by the Hold/Manual button. The Hold/Manual button must be pressed once in order to place the 3455A in the Hold mode. After pressing the Hold/Manual button the second time, a measurement is taken. When the measurement cycle is completed, the Hold/Manual button can be pressed again for a new reading. It is important to remember that the Hold/Manual button should be pushed twice in order to take the first reading. If triggered while a measurement is taken, the trigger is delayed until the measurement cycle is complete. The delayed trigger will initiate a second measurement cycle, when the first one is completed. Only one trigger will be delayed during any given measurement cycle. Any extra triggers sent during this cycle will be ignored.

3-35. Auto-Cal constants measurements also depend on the Trigger mode used. An input reading and a cal constant measurement will alternately be taken, when the 3455A is in the Internal Trigger mode. A typical sequence would be an input reading, one cal constant measurement, another input reading, the next cal constant measurement, and so on. An attempt of this sequence (input reading/cal Constant measurement) is also made when the instrument is in the Hold/Manual or External Trigger modes. If, however, a trigger is received while a cal constant measurement is taken, this measurement is aborted and an input reading is taken. After this reading, the aborted cal constant measurement is then retaken. If a new trigger is received before the cal constant measurement is finished, the measurement is again aborted and a new input reading is taken. The cal constant measurement can be aborted a number of times, depending on the function of the instrument. The table below lists the number of times the cal constant measurements can be aborted. After this number has been reached, the trigger will be delayed and the Auto-Cal constant measurement is then completed.

Function	Maximum Number of Cal Constant Termination
DC	128
DC (High Resolution)	32
AC Fast	64
AC Normal	8
Ohms	64
Ohms (High Resolution)	16

These numbers are accumlative when Auto-Cal is on.

3-36. Sample Rate (Display).

3-37. The SAMPLE RATE of the 3455A is set internally and depends on the function selected, the power line

frequency, and use of the Auto-Cal and High Resolution modes. When the Sample Rate buttons are pressed, the display rate of the reading are changed. By depressing the Decrease ÷ 2 button on the front panel, the display rate can be decreased. Each time this button is pressed, the display rate is divided by two. The rate may be divided a maximum of six times for a display rate of 1/64 of the maximum rate. The 3455A can be reset to the maximum rate by depressing the maximum button, after the display rate has been decreased. Table 3-1 gives the maximum number of readings the instrument can display on the front panel, in local operation.

Table 3-1. Maximum Front Panel Reading Rates.

Func Function	High Resolution	Auto Calibration	Maximum Sample Rate Maximum Sample Rate
DC Volts	ON	ON	3 readings/sec (60 Hz) 2.5 readings/sec (50 Hz)
	OFF	ON	5 readings/sec (60 Hz) 3.5 readings/sec (50 Hz)
	ON	OFF	6 readings/sec (60 Hz) 5 readings/sec (50 Hz)
	OFF	OFF	24 readings/sec (60 Hz) 22 readings/sec (50 Hz)
Ohms	ON	ON	2 readings/sec (60 Hz) 1.8 reading/sec (50 Hz)
	OFF	ON	45 readings/sec (60 Hz) 4 readings/sec (50 Hz)
	ON	OFF	3 readings/sec (60 Hz) 2.5 readings/sec (50 Hz)
	OFF	OFF	12 readings/sec (60 Hz) 11 readings/sec (50 Hz)
AC Volts	Not Applicable	ON	1.3 readings/sec (60 Hz) 1.1 readings/sec (50 Hz)
	Not Applicable	OFF	1.3 readings/sec (60 Hz) 1.1 readings/sec (50 Hz)
Fast AC Volts	Not Applicable	ON	4.5 readings/sec (60 Hz) 3.5 readings/sec (50 Hz)
	Not Applicable	OFF	13 readings/sec (60 Hz) 12 readings/sec (50 Hz)

3-38. Auto Range.

3-39. The AUTO RANGE feature of the 3455A can be used to automatically uprange and downrange the instrument to the optimum range. This action takes place when an input measurement is taken. Upranging is done when the reading is 150% of full scale and downranging at 14% of full scale. The Auto Range operation can be observed by applying 1.4 volts to the input of the 3455A. The range selected by the instrument is the 1 V range. When the input voltage exceeds 1.5 volts, the 3455A upranges to the 10 V range. When the input voltage is decreased below 1.4 volts, the 1 V range is again selected. The uprange points, the downrange points, and the accuracy of the instrument should be kept in mind when making a measurement. Time-varient inputs may cause the 3455A to constantly uprange and downrange. If this happens, manually set the instrument to the higher range.

3-40. Measurement time may also change, when the instrument is in the Auto Range mode. If the instrument is not on the optimum range, a reading is taken and the 3455A will either uprange or downrange. Another reading is then taken and if the optimum range has been found the reading will be displayed. If not, the instrument continues to uprange or downrange. A reading is taken on all intermediate non-optimum ranges until the correct range is found. The measurement time on each range should be added to the total measurement time.

3-41. GUARDING.

3-42. Common-Mode Voltages.

3-43. Common-mode voltages are those which are generated between the power line ground point of the source and the LO input and power line ground point of the 3455A. Currents caused by common-mode voltage can be included in the measurement circuit, causing measurement errors.

3-44. Guard Connection.

3-45. Figure 3-3 illustrates three methods of connecting the 3455A Guard terminal to reduce errors caused by common-mode voltages. In example A, Guard is at nearly the same potential as the LO measurement terminal so that currents caused by common-mode voltage flows through Guard and not the measurement circuit. In example B, the 3455A guard switch is closed connecting guard to the LO input terminal. This allows common-mode current to flow through lead resistance R_b causing some measurement error. This connection may be used if common-mode voltages are not expected to be a problem. Example C is similar to A with the exception that connecting guard in this manner allows any common-mode current generated between the source low and powerline ground to flow in the measurement circuit.

NOTE

The front panel guard pushbutton applies only for front panel inputs. Be sure to wire rear panel guard connections yourself, if using the rear panel input terminals.

3-46. Guarding Information.

3-47. More detailed information on purpose and methods of guarding may be found in -hp- Application Note No. 123, "Floating Measurements and Guarding". This application note is available through your nearest -hp- Sales and Service Office.

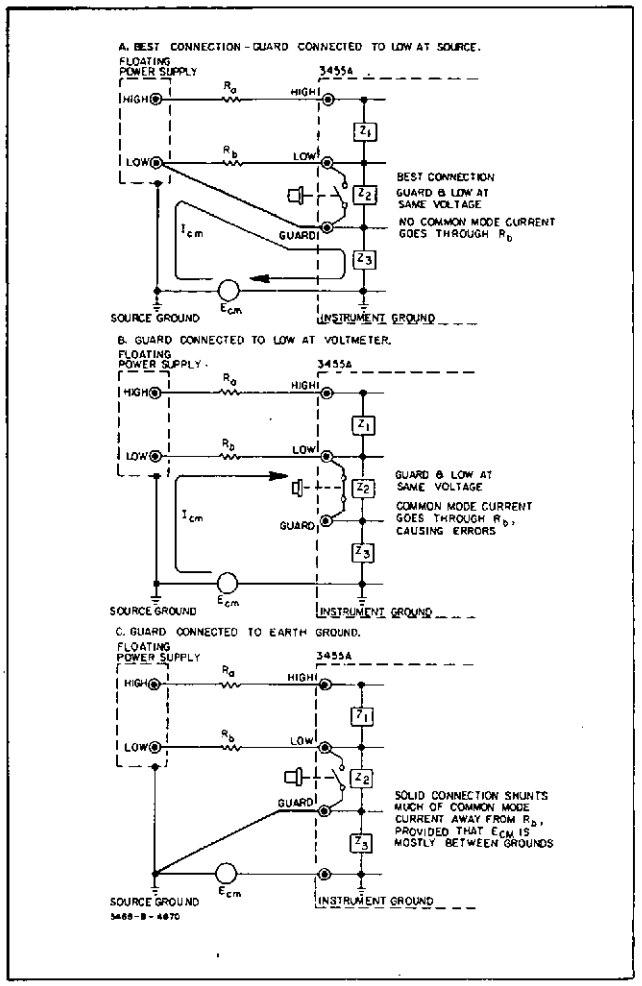

Figure 3-3. Connecting the Guard.

CAUTION

Guard should always be connected, either to the instrument LO terminal or to a point in the source circuit as indicated in Figure 3-3. If the guard terminal is left open, common-mode voltages may exceed the LO-to-Guard breakdown rating and damage the instrument.

3-48. REMOTE OPERATION.

3-49. General.

3-50. The Model 3455A is remotely controlled by means of the Hewlett-Packard Interface Bus (HP-IB). The HP-IB is a carefully defined instrumentation interface which simplifies the integration of instruments, calculators, and computers into systems.

NOTE

HP-IB is Hewlett-Packard's implementation of IEEE Std. 488-1975, "Standard Digital Interface for Programmable Instrumentation."

3-51. The capability of a device connected to the Bus is specified by the interface functions it has. Table 3-2 lists the Interface Functions included in the Model 3455A. These functions are also listed above the rear panel HP-IB connector (see Figure 3-1). The number following the interface function code indicates the particular capability of that function as listed in Appendix C of IEEE Std. 488-1975.

Table 3-2. HP-IB Interface Capability.

Code	Interface Function
SH1	Source Handshake capability
AH1	Acceptor Handshake Capability
T5	Talker (basic talker, serial poll, talk only mode, unaddress to talk if addressed to listen)
L4	Listener (basic listener, unaddress to listen if addressed to talk)
SR1	Service Request Capability
RL1	Remote/Local Capability
PP0	No Parallel Poll Capability
DC1	Device Clear Capability
DT1	Device Trigger Capability
C0	No Controller Capability
E1	Open Collector Bus Drivers

Interface Functions provide the means for a device to receive, process and send messages over the bus.

3-52. Messages are the means by which devices exchange control and measurement information. These messages permit communication and/or control between:

Controller and Device(s)
Device and Device(s)
Controller and Controller(s)

Table 3-3 lists the Bus Messages and gives a brief description of each. The messages are categorized by Bus function.

3-53. Address Selection.

3-54. The "talk" and "listen" addresses of the 3455A are selected by the INSTRUMENT ADDRESS switch. This switch is a seven section "Dip" switch located on the rear panel (see Figure 3-1). The five switches, labeled 1 through 5 are used to select a unique talk and listen address. Figure 3-4 lists the available address codes and the corresponding switch settings. The 3455A normally leaves the factory with the switch set to listen address 6 and talk address V (decimal code 54).

3-55. Talk Only (No Controller). The 3455A may be used to provide measurement data to another device, such as a printer, without having a controller on the Bus. However, the device must be HP-IB compatible. The talk only switch must be set to the TALK ONLY position. In this mode the 3455A will output measurement

Table 3-3. Bus Messages.

Functions	Message	Description
Device Communications	Data	Transfers device-dependent information from one device to one or more devices on the Bus.
Device Control	Trigger	Causes a group of selected devices to simultaneously intitate a set of device-dependent actions.
	Clear	Causes an instrument to be set to a pre-defined state (a certain range, function, etc.).
	Remote	Permits selected devices to be set to remote operation, allowing parameters and device characteristics to be controlled by Bus Messages.
	Local	Causes selected devices to return to local (front panel) operation.
	Local Lockout	Disables local (front panel) controls of selected devices.
	Clear Lockout and Local	Returns all devices to local (front panel) control and simultaneously clears the Local Lockout Message.
Interrupt and Device Status	Require Service	Indicates a device's need for interaction with the controller.
	Status Byte	Presents status information of a particular device; one bit indicates whether or not the device currently requires service, the other 7 bits (optional) are used to indicate the type of service required.
	Status Bit	A single bit of device-dependent status information which may be logically combined with status bit information from other devices by the controller.
Passing Control	Pass Control	Passes bus controller responsibilities from the current controller to a device which can assume the Bus supervisory role.
Bail Out	Abort	Unconditionally terminates Bus communications and returns control to the system controller.

data each time a measurement sample is made. Section of FUNCTION, RANGE, TRIGGER, etc. is accomplished manually using the front panel controls.

NOTE

When the 3455A is connected to a system with a controller, the TALK ONLY switch must be set to the off position.

3-56. Program Codes.

3-57. All front panel controls, except the LINE switch, GUARD switch, and SAMPLE RATE switches, are programmable from the Bus. The program codes for each control are listed in Table 3-4. The program codes can also be determined from the front panel markings. For multi-control features such as FUNCTION, RANGE, TRIGGER, and MATH the program code consists of the combination of the underlined letter in the control group heading and the position number of the particular control. See the following example:

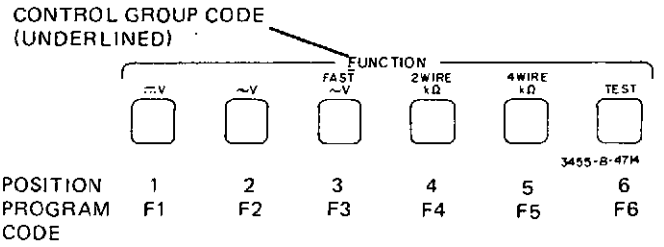

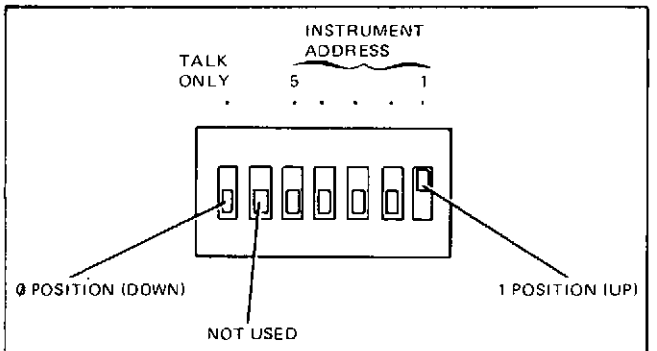

ASCII Code Character		Address Switches					5-bit Decimal Code
Listen	Talk	A5	A4	A3	A2	A1	
SP	@	0	0	0	0	0	00
!	A	0	0	0	0	1	01
"	B	0	0	0	1	0	02
#	C	0	0	0	1	1	03
$	D	0	0	1	0	0	04
%	E	0	0	1	0	1	05
&	F	0	0	1	1	0	06
'	G	0	0	1	1	1	07
(	H	0	1	0	0	0	08
)	I	0	1	0	0	1	09
*	J	0	1	0	1	0	10
+	K	0	1	0	1	1	11
,	L	0	1	1	0	0	12
-	M	0	1	1	0	1	13
.	N	0	1	1	1	0	14
/	O	0	1	1	1	1	15
0	P	1	0	0	0	0	16
1	Q	1	0	0	0	1	17
2	R	1	0	0	1	0	18
3	S	1	0	0	1	1	19
4	T	1	0	1	0	0	20
5	U	1	0	1	0	1	21
6	V	1	0	1	1	0	22
7	W	1	0	1	1	1	23
8	X	1	1	0	0	0	24
9	Y	1	1	0	0	1	25
:	Z	1	1	0	1	0	26
;	[	1	1	0	1	1	27
<	\	1	1	1	0	0	28
=	]	1	1	1	0	1	29
>	^	1	1	1	1	0	30

Figure 3-4. Address Selection.

Table 3-4. HP-IB Program Codes.

	Control	Program Code
FUNCTION	DC Volts	F1
	AC Volts	F2
	Fast AC Volts	F3
	2 Wire kΩ	F4
	4 Wire kΩ	F5
	Test	F6
RANGE	.1	R1
	1	R2
	10	R3
	100	R4
	1 K	R5
	10 K	R6
	AUTO	R7
TRIGGER	Internal	T1
	External	T2
	Hold/Manual	T3
MATH	Scale	M1
	Error	M2
	Off	M3
ENTER	Y	EY
	Z	EZ
STORE	Y	SY
	Z	SZ
AUTO CAL	Off	AØ
	On	A1
HIGH RESOLUTION	Off	HØ
	On	H1
DATA READY RQS	Off	DØ
	On	D1
BINARY PROGRAM		B

3-58. The program code for single control features which can only be programmed on or off (AUTO CAL and HIGH RESOLUTION) consist of the letter underlined in the control heading and the number "Ø" for off or the number "1" for on. This also applies to the DATA READY Request feature which is Bus programmable only.

Example:

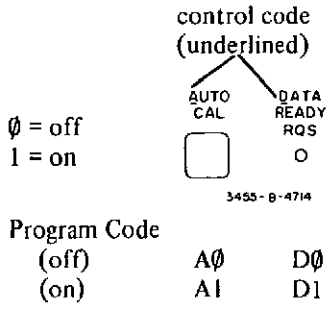

3-59. Program codes for the ENTER and STORE features consist of the letter underlined in the control heading and the underlined letter of the particular control.

Example:

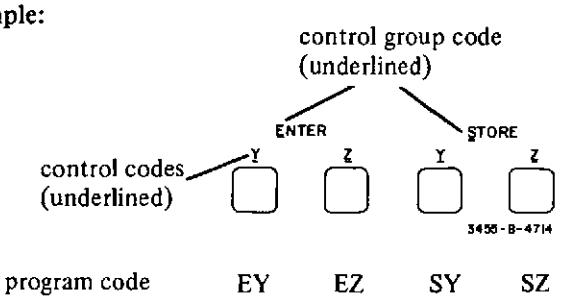

3-60. The program code of the BINARY PROGRAM feature consists of only the underlined character in the control heading (B).

3-61. Data Messages.

3-62. The major portion of communications transmitted over the Bus is accomplished by data messages. Data messages are used by the controller to program the Model 3455A and are used by the 3455A to transmit measurement data. These functions are explained in the following paragraphs.

3-63. Programming. The 3455A is programmed by means of data messages sent over the Bus from the controller. These messages are composed of two parts — the address command and the program information. The address command contains the "talk" and "listen" addresses of the devices involved; in this case, the talk address of the controller and the listen address of the 3455A. The program information contains the codes of the 3455A controls to be programmed. Syntax of the address command portion of the data message is dependent upon the controller being used. For the proper syntax refer to the controller manual. Syntax for the program information portion consists of the program codes listed in Table 3-4.

Example program data messages:

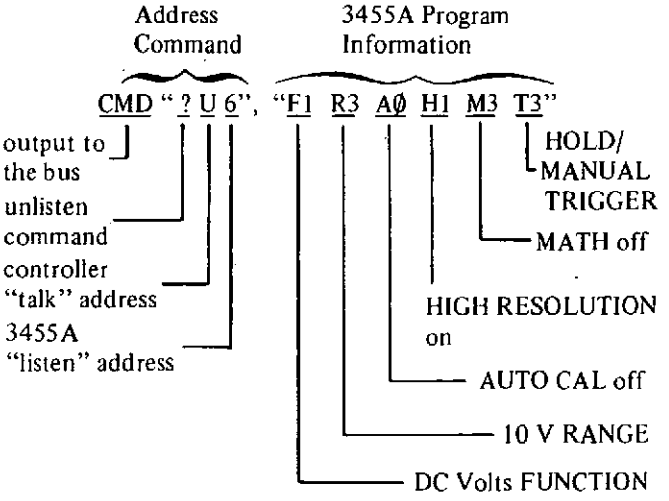

Program data message using the 9830A Calculator.

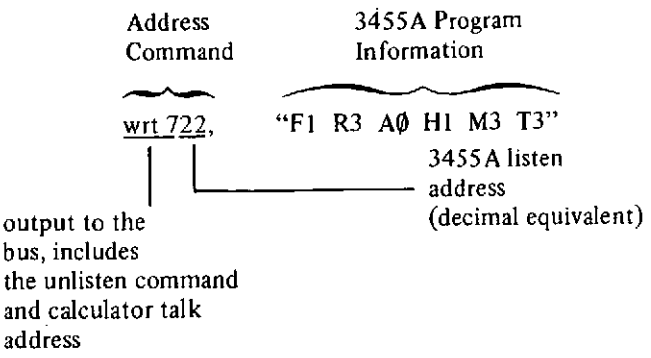

Program data message using the 9825A Calculator.

3-64. Entering MATH Constants (Y and Z) from the Bus. The following data message illustrates the program information necessary to enter numbers into the Y and Z registers:

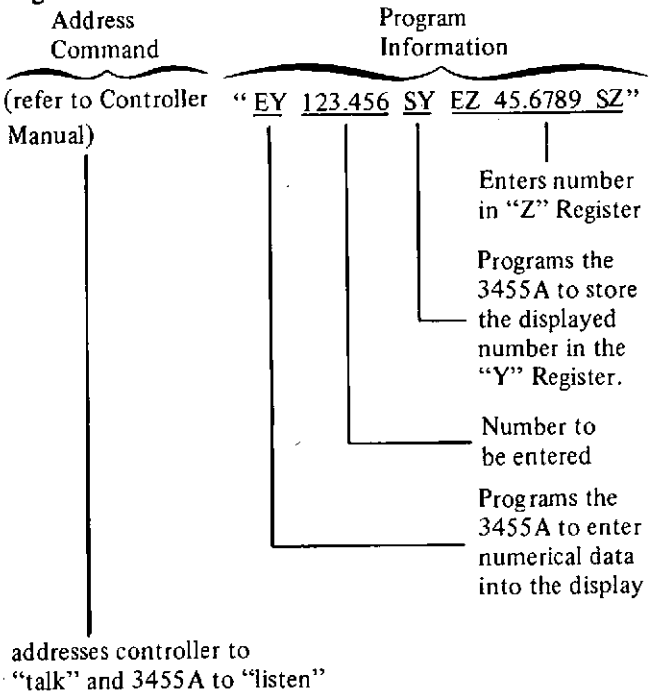

The number stored in the Y or Z register can be read from the Bus by programming the ENTER feature and the particular register. This transfers the number from the storage register specified to the display. The number displayed is output to the Bus by addressing the 3455A to "talk". The number is returned to the storage register by programming the STORE feature and the desired register. The following example illustrates how to read the numbers stored in the Y and Z register from the Bus:

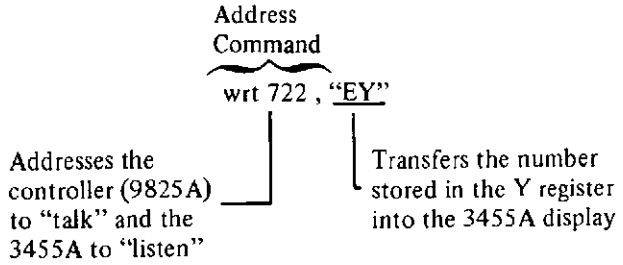

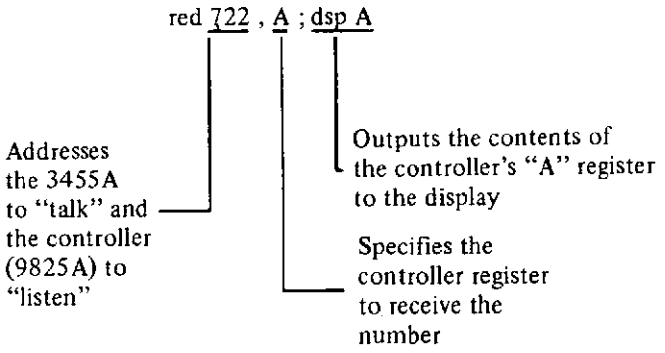

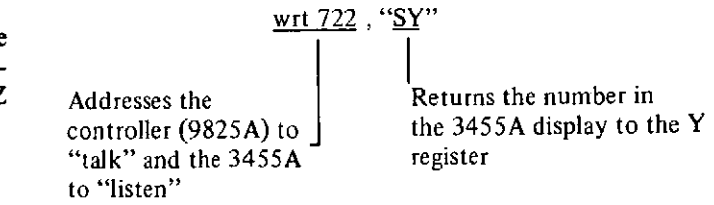

3-65. Data Ready Request. The DATA READY Request feature permits the 3455A to signal the controller upon the completion of a measurement. This feature would normally be used where the 3455A is triggered from an external source. In this mode of operation, the 3455A is programmed to the appropriate measurement parameters (FUNCTION, RANGE, etc.). The controller is then free to control other instruments on the Bus. Upon being triggered, the 3455A makes a measurement and outputs a "Require Service" message to notify the controller that the measurement information information is ready. Upon receiving the service request, the controller with serial poll the 3455A to determine the nature of the service request. Upon being polled, the 3455A outputs a status byte, in this case the ASCII character "A" (decimal 65), indicating the measurement data is ready. The controller then disables the serial poll and reads the measurement data. The program codes for the DATA READY RQS feature are:

DØ Data Ready Request off
D1 Data Ready Request on

3-66. Binary Program Feature. The BINARY PROGRAM feature permits the status of the FUNCTION, RANGE, TRIGGER, MATH, AUTO-CAL and HIGH RESOLUTION controls to be determined or programmed from the bus in four 8-bit binary words. The BINARY PROGRAM feature allows faster programming of the 3455A by reducing the number of program data bytes from a maximum of 12 for normal programming to 4 data bytes for binary programming. The BINARY PROGRAM codes can also be read and stored by the controller to re-program the 3455A at a later time (see Appendix A). One important thing to remember is to send a "B" to the 3455A in order to put the instrument into the BINARY mode. Table 3-5 lists the allowable BINARY PROGRAM codes for each of the four data bytes and the front panel keys they control.

3-67. The following data message examples illustrate how to read or program the front panel control of the 3455A. To read control status:

wrt 722, "B"

Address the 3455A to "listen"

Set the 3455A to the BINARY PROGRAM mode

Since normally four data bytes are used in Binary programming, the 3455A may indicate an SRQ condition when only a "B" is sent.

red 722

Address the 3455A to "talk"

The 3455A, after receiving the "talk" command, will output the front panel control status codes (4 bytes). As an example, if the front panel controls were in the "turn-on" state, the 3455A would output the following codes:

; N = >

MATH OFF

DC Volts FUNCTION

AUTO CAL ON
AUTO RANGE ON
HIGH RESOLUTION OFF
INTERNAL TRIGGER

1 Volt RANGE
(depends on input applied)

To program front panel controls:

wrt 722, "B ;K / = "

Address the 3455A to "listen"

Desired program codes (see Table 3-5)

Set 3455A to BINARY PROGRAM mode

3-68. Measurement Data. Measurement data is output by the 3455A in the following general format:

OUTPUT FORMAT: ± D.DDDDDDE ± DD CRLF

Polarity of measurement (does not apply to ACV or OHM measurements)

Terminates message

Measurement reading expressed in scientific notation

This format is printed in the lower left corner of the 3455A front panel for convenience. The following is an example of a data message output by the 3455A:

Table 3-5. BINARY PROGRAM Codes.

First BINARY PROGRAM Data Byte

Controls Affected: SCALE, % ERROR, OFF (MATH)

To Program:	Program Code ASCII CHAR	Program Code DECIMAL CODE
OFF	;	59
% ERROR	=	61
SCALE	>	62

Second BINARY PROGRAM Data Byte

Controls Affected: AUTO CAL, AUTO RANGE, HIGH RESOLUTION, HOLD/MANUAL, EXTERNAL, INTERNAL

To Program: AUTO CAL	AUTO RANGE	HIGH RESOLUTION	TRIGGER	PROGRAM CODE ASCII CHAR	PROGRAM CODE DECIMAL CODE
Off	Off	Off	Hold/Manual	:	59
			External	=	61
			Internal	>	62
Off	Off	On	Hold/Manual	3	51
			External	5	53
			Internal	6	54
Off	On	Off	Hold/Manual	+	43
			External	–	45
			Internal		46
Off	On	On	Hold/Manual	#	35
			External	%	37
			Internal	&	38
On	Off	Off	Manual/Hold	[	91
			External	]	93
			Internal	^	94
On	Off	On	Manual/Hold	S	83
			External	U	85
			Internal	V	86
On	On	Off	Manual/Hold	K	75
			External	M	77
			Internal	N	78
On	On	On	Manual/Hold	C	67
			External	E	69
			Internal	F	70

Third BINARY PROGRAM Data Byte

Controls Affected: 10 K, 1 K, 100, 10, 1, .1 (RANGE)

To Program:	Program Code ASCII CHAR	Program Code DECIMAL CODE
10 K	_	95
1 K	/	47
100	7	55
10	;	59
1	=	61
.1	>	62

Fourth BINARY PROGRAM Data Byte

Controls Affected: TEST, 4 WIRE kΩ, 2 WIRE kΩ, FAST ACV, ACV, DCV (FUNCTION)

To Program:	Program Code ASCII CHAR	Program Code DECIMAL CODE
TEST	_	95
4 WIRE kΩ	/	47
2 WIRE kΩ	7	55
FAST ACV	;	59
ACV	=	61
DCV	>	62

Input to 3455A: -143.5 volts DC
Output Data Message: -1.435000 E + 02 CR LF

The 3455A will output a measurement data message when addressed to "talk". The syntax for addressing the 3455A is dependent upon the controller being used. Refer to the Operating Manual of your controller for instructions.

NOTE

An overload measurement is indicated by an E + 10 exponent in the HP-IB measurement data. The large exponent is the key.

Also, note that the LF character (concurrent with EOI) is the last character in the data message and must be handshook from the 3455A to complete the measurement transfer.

3-69. Device Control Messages.

3-70. Device control messages are issued by the system controller to manage instruments on the bus. These messages are controller dependent. For specific information as to syntax and procedures to transmit the control messages, refer to the Operating Manual of the controller being used.

3-71. The following paragraphs describe the 3455A response to the various control messages.

3-72. Trigger Message. The trigger message causes the 3455A to initiate a measurement cycle. The 3455A must be addressed to "listen" in order to recognize the trigger message. The measurement results of the 3455A depend upon the control settings (FUNCTION, RANGE, etc.) at the time the trigger message is received.

3-73. Clear Message. Upon receiving the clear message, the 3455A sets the front panel controls to their "turn-on" state. The turn-on state is as follows:

FUNCTION	DC VOLTS
RANGE	AUTO
TRIGGER	INTERNAL
MATH	OFF
AUTO CAL	ON
HIGH RESOLUTION	OFF
DATA READY RQS	OFF
BINARY PROGRAM	OFF

The 3455A will respond to the device clear message whether addressed to "listen" or not. To respond to the selected device clear message, the 3455A must be addressed to listen.

3-74. Remote Message. The 3455A will go to Remote (Bus) control when the remote message, in conjunction with its "listen" address, is received. Remote operation is indicated when the REMOTE indicator, located above the display, is lit. During remote operation, the front panel controls cannot be operated manually.

3-75. Local Message. The local message returns the 3455A to LOCAL (manual) control. The 3455A can also be returned to local control by pressing the front panel LOCAL button. Some circuits of the instrument may also be in local operation when a local message is send to another instrument on the HP-IB.

7-76 Local Lockout Message. The local lockout message disables the front panel LOCAL control. In the local lockout mode, the 3455A cannot be returned to local operation from the front panel.

3-77. Clear Lockout and Local Message. The 3455A will set the front panel to LOCAL (manual) operation and enable the LOCAL control upon receiving the clear lockout and local message.

3-78. Interrupt and Device Status Messages.

3-79. The interrupt and device status messages permit the 3455A to notify the controller when an error in programming information or measurement output data occurs. The 3455A also uses these messages to notify the controller when measurement data is available if the DATA READY REQUEST feature is programmed.

3-80. Require Service Message. The following conditions will cause the 3455A to output a Require Service (SRQ) message.

a. *Data Ready.* If the DATA READY REQUEST feature is programmed, the 3455A will output an SRQ message upon completing the required measurement.

b. *Syntax Error.* The 3455A will output an SRQ message if a program code other than those listed in Table 3-4 is received. For example, the program code "F7" would cause a syntax error since the FUNCTION program set only contains codes F1 through F6.

c. *BINARY PROGRAM Error.* The 3455A will output an SRQ message if a BINARY PROGRAM code other than those listed in Table 3-5 is received.

d. *Trigger Too Fast.* An SRQ message will be output if the 3455A is triggered while outputting data to the bus. This condition most commonly occurs if the 3455A is programmed to INTERNAL TRIGGER during bus operation. The front panel SRQ indicator is lit when the 3455A requires service. The Require Service message can be cleared by serial polling the 3455A or by clearing the 3455A.

3-81. Status Byte Message. The status byte message is output by the 3455A in response to a serial poll and indicates, to the controller, the nature of a service request message (SRQ) from the 3455A. The following is a list of the basic status byte codes output by the 3455A:

Status Byte Code		
ASCII CHAR	Decimal Code	
A	65	Data Ready - Indicates to the controller that measurement data is available. Applies to DATA READY Request feature.
B	66	Syntax Error - Indicates improper program code. Example - Program Code "F7" would cause a syntax error since the FUNCTION program set is only defined for codes F1 through F6.
D	68	BINARY FUNCTION Error - Indicates improper BINARY PROGRAM code or incomplete binary message. Similar to syntax error.
H	72	Trigger too Fast - Indicates the 3455A has been triggered while measurement data is being output to the bus. Warns of possible incorrect measurement information.

It is possible for more than one of the basic status byte messages to be true. In this case the resulting status byte code would be the combintation of the basic status byte codes being output. As an example, the resulting code for the combination of the syntax error and trigger too fast messages would be ASCII character J decimal code 74. The following illustrates the status Byte message indicating the purpose of each relevant "bit".

STATUS BYTE MESSAGE

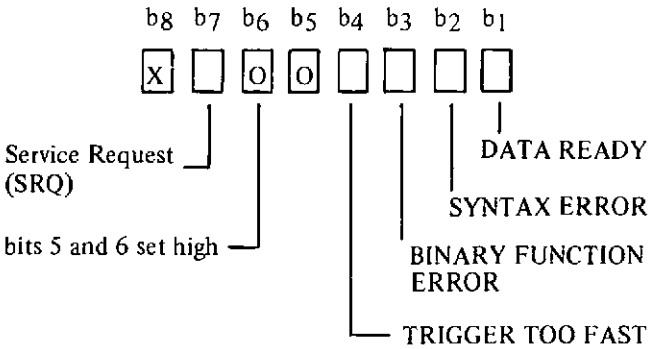

NOTE

All "bits" are low true; bit 8 is not used.

3-82. DATA OUTPUT CHARACTERISTICS.

3-83. The protocol used by the 3455A to output measurement data must be followed in order to preserve proper data transfer over the HP-IB, the following notes on data transfer over the HP-IB may be helpful:

a. If a reading has been taken and thus resides in the output buffer, the buffer is not considered busy until the output handshaking begins. Thus, a new trigger will indicate a measurement and the new reading will replace the old reading. The old reading is lost and there is no SRQ condition.

b. Once the first character of measurement data has been handshaken out, the buffer is considered busy until one of the following occurs:

1. The balance of the reading is handshaken out.
2. "Device" or "Selected Device" clear is given.
3. The 3455A power is interrupted, triggering while the buffer is busy will lose the new reading and cause a "Trigger too Fast" SRQ condition.

c. When triggering and taking measurements in a loop, sufficient time must be allowed for the 3455A to perform the entire A-To-D measurement cycle and buffer data to become available after the first reading. The "Wait" statements in many 9800 series calculators are convenient methods to avoid outputting the previous buffer contents. This condition shows up as being "One reading behind" in your measurement sequence.

d. If you know the output buffer is not busy, but don't know whether it is full or not, sending a "device" or selected device" clear followed by reprogramming the desired conditions is a safe way to clear the output buffer.

3-84. Bail Out Message.

3-85. Abort. The Abort message unconditionally terminates all Bus communications and returns control to the system controller. Only the system controller can send the Abort message. Refer to the Operating Manual of the controller being used for instructions on sending the Abort Message.

3-86. Instrument Measurement Times (Remote Control).

3-87. In the Remote Operating mode, the 3455A takes a certain amount of time to respond to a trigger message. The overall time depends on the range, function, and particular controller used. This time may also vary from instrument to instrument. Table 3-6 gives the typical measurement times, using the HP-IB. These times are not part of the operating specifications of the instru-

ment, and are only provided as additional information for HP-IB system use. The following is an explanation of the various times involved in a measurement sequence.

a. *t1 (Typical Input Data Transfer Time):* This is the typical time it takes to transfer input data (set the 3455A to a certain function and range, etc) from a controller to the instrument. The transfer time depends on the number of ASCII character send to the instrument and the response time of the controller. For example, to send an "F1T3" message to the instrument takes four characters.

b. *t2 (Typical Input Settling Time):* The instrument is triggered (HP-IB, External, or Hold/Manual Trigger) and the 3455A begins to take a reading. This time consists of the settling time of the input relays, FETs, and other circuits.

c. *t3 (Typical Measurement Time):* The input measurement is taken at this time. This includes the A-to-D conversion time.

d. *t4 (Typical Computation Time):* When the measuring and the A/D operations are completed, the instrument's internal main controller circuits calculates the correct measurement reading. This time is the amount of the time it takes to complete the calculation.

d. *t5 (Typcial Output Data Transfer Time):* The 3455A now sends the reading to the HP-IB output buffers to be transferred to the controller. This time also depends on the response time of the particular controller.

3-88. Remote Programming Examples.

3-89. Appendix A at the end of this manual has Remote Programming examples for the 3455A. These examples are given in the HP Basic (-hp- Model 9830A/B Controller), HPL (-hp- Model 9825A Controller) and Enhanced Basic (-hp- Model 9835A/B and 9845A/B Controller) languages. The examples in the Appendix can be helpful when you write programs for the 3455A.

3-90. OPERATORS CHECKS.

3-91. The TEST feature provides a convenient method of testing the basic operational capabilities of the Model 3455A. This test plus an operational check of the Ohms and AC functions tests the major portion of the 3455A circuitry. Keep in mind the following checks test only the operating capability of the 3455A. They do not check the performance accuracy.

3-92. BENCH USE.

3-93. The following sequence may be used to manually check operational capability of the 3455A.

a. Set the 3455A to AUTO RANGE.

b. Press the TEST button. The display should be blank while the 3455A is performing the self test. Upon successful completion of the test, all front panel indicators (except the REAR TERMINAL indicator) will light and a reading of +8888888 with all decimals lit will be displayed. The self test will be repeated until another function is selected.

c. Connect a short across the INPUT terminals.

d. Press the 2 WIRE kΩ button. The front panel display should read .00000 ± 300 milliohms.

e. Press the ACV button. The display should read .00000 ± 600 microvolts.

3-94. HP-IB Operation.

3-95. Figure 3-5 shows the steps necessary to perform the 3455A operators check from the Bus.

Table 3-6. Typical HP-IB Controlled Measurement Times.

Function		Line Frequency	Input Data Transfer Time t1	Input Setting Time t2	Measurement Time t3	Computation Time t4	Output Data Transfer Time t5
DC Volts	High Resolution OFF Auto-Cal OFF	60 Hz	550 µsec per character plus the response time of Controller	12 msec	19 msec	12.5 ms for .1 V to 10 V Ranges	750 msec per character plus the response time of the controller (the 3455A output usage consists of 15 characters).
		50 Hz			22 msec		
	High Resolution ON Auto-Cal ON	60 Hz			14 msec	15.5 msec for 100 and 1000 V Ranges	
		50 Hz			22 msec		
	High Resolution ON Auto-Cal OFF	60 Hz			136 msec	12 msec all Ranges	
		50 Hz			162 msec		
	High Resolution ON Auto-Cal ON	60 Hz			136 msec		
		50 Hz			162 msec		
Ohms	High Resolution OFF Auto-Cal OFF	60 Hz		12 msec	48 msec		
		50 Hz		14 msec	55 msec		
	High Resolution OFF Auto-Cal ON	60 Hz		12 msec	48 msec		
		50 Hz		14 msec	55 msec		
	High Resolution ON Auto-Cal OFF	60 Hz		17 msec	280 msec		
		50 Hz		22 msec	330 msec		
	High Resolution ON Auto-Cal ON	60 Hz		17 msec	280 msec		
		50 Hz		22 msec	330 msec		
Normal AC Volts	Auto-Cal ON or OFF*	60 Hz		35 msec	700 msec		
		50 Hz		42 msec	830 msec		
Fast AC Volts	Auto-Cal ON or OFF	60 Hz		12 msec	57 msec		
		50 Hz		14 msec	64 msec		

3455A Triggered at this time

Note: Time t3 should be used for each range being measured when the 3455A is in the Auto-range mode (see Paragraph 3-38.)

SECTION IV
PERFORMANCE TESTS

4-1. INTRODUCTION.

4-2. This section contains performance and operational verification test procedures which can be used to verify that the 3455A meets its published specifications (listed in Table 1-1). All tests can be performed without access to the interior of the instrument. The performance tests in this section do not test the 3455A Math Functions or HP-IB Interface. These functions can be tested using the operators test procedures included in Section III.

4-3. EQUIPMENT REQUIRED.

4-4. The test equipment required for the performance tests is listed at the beginning of each procedure and in the Recommended Test Equipment Table in Section I. If the recommended equipment is not available, use substitute equipment that meets the critical specifications given in the table.

4-5. PERFORMANCE TEST CARD.

4-6. Performance Test Cards are provided at the end of this section for your convenience in recording the performance of the 3455A during either test. These cards can be removed from the manual and used as a permanent record of the incoming inspection or of a routine performance test. The Test Cards may be reproduced without written permission from Hewlett-Packard.

4-7. CALIBRATION CYCLE.

4-8. The 3455A requires periodic verification of performance. The performance should be tested as part of the incoming inspection and at 90-day or 6-month intervals, depending on the environmental conditions and your specific accuracy requirements. Two tests (performance and opertional verification) are provided in this section. The operational verification test should be performed as an incoming inspection of the instrument. The complete performance test can be used at the 90-day or 6-month intervals, and following a complete calibration of the instrument.

4-9. INPUT TERMINALS/CONTROL SETTINGS.

4-10. Unless otherwise specified, the test signals for the performance tests can be applied to either the front or rear INPUT terminals. All tests must be performed in the INTERNAL Trigger Mode with AUTO CAL on and MATH off. For standard instruments (rms converter) the rear panel AC - AC/DC switch must be in the ac position. Other control settings are included in the test procedures.

4-11. PERFORMANCE TEST FAILURE.

4-12. If the 3455A fails any of the performance tests or operational verification test, perform the adjustments outlined in Section V. If the problem cannot be corrected by the adjustment, refer to Section VIII for troubleshooting information.

4-13. SPECIFICATION BREAKDOWN.

4-14. The dc, ac and ohms accuracy specifications (Table 1-1) are grouped according to the selected instrument function, i.e., High Resolution On or Off, ACV or Fast ACV and 2-Wire or 4-Wire ohms. Within each group there are three sets of specifications:

a. 24 hour (23°C ± 1°C)
b. 90 day (23°C ± 5°C)
c. 6 months (23°C ± 5°C)

4-15. The time period over which a set of specifications applies is relative to the time the instrument is initially adjusted at the factory or is properly readjusted according to the procedures outlined in Section V. Before proceeding with the dc, ac and ohms accuracy tests, it will be necessary to determine which set of specifications applies to your instrument. If the instrument has just been received and is to be tested as part of the incoming inspection, test for the 90-day specifications. If the instrument has been readjusted within a period of 24 hours, test for the 24-hour specifications. Test limits for the 24-hour and 90-day specifications are included in the tables for the accuracy tests. Test limits for the 6-month specifications must be derived from the specifications listed in Table 1-1. If the instrument is operated outside for the temperature range for a given set of specifications, the appropriate temperature coefficients, listed in Table 1-1, must be added to those specifications. The test limits given in the tables for the dc, ac and ohms accuracy tests do not include temperature coefficients.

4-16. Each set of specifications includes an accuracy specification for each voltage or ohms range. Accuracy is specified as a percentage of reading plus an add-on of one or more digits (counts). For example, the 24-hour DC Accuracy specification for the 1-volt range (High Resolution Off) is:

$$\pm\ (0.003\%\ \text{of reading} + 1\ \text{digits})$$

At full scale (1 V) the least significant display digit, equal to 10 microvolt, is 0.001% of reading. The full-scale accuracy is therefore:

$$\pm (0.003\% + 0.001\%) = \pm 0.004\% \text{ of reading}$$

Similarly, at one tenth of full scale (0.1 V) the least significant digit (10 microvolt) is equal to 0.01% of reading so the accuracy specification is:

$$\pm (0.003\% + 0.01\%) = \pm 0.013\% \text{ of reading}$$

These specifications do not include the temperature coefficient that must be added if the instrument is operated outside of the 22°C to 24°C range.

4-17. DC ACCURACY TEST CONSIDERATIONS.

4-18. Because of the high dc accuracy of the 3455A, a precision dc calibration standard is required to verify that it meets its dc accuracy specifications. To thoroughly test the performance on all ranges, the standard must be capable of delivering outputs within the range of 0.10000 V dc to 1000.000 V dc. The accuracy of the standard must be such that its errors do not introduce significant uncertainties in the 3455A test readings. Ideally, the accuracy of the standard should be ten times better than the 3455A specifications being tested — a ten to one error reduction nearly eliminates measurement uncertainties caused by the standard. To test accuracy specifications on the order of ± 0.005% of reading, however, a standard with a specified accuracy of ± 0.0005% (5 ppm) would be required. Since this type of accuracy, over the range needed to completely test the accuracy of the 3455A, is generally not available outside of a standards laboratory, some compromises may be required. If you have access to primary in-house (NBS certified) standards or have calibrated transfer standards that are capable of delivering the required output voltages, we recommend that you use them. If you do not have access to such facilities you may, depending on your specific accuracy requirements, choose to do one of the following:

a. Use a dc calibration standard that is four or five times more accurate than the 3455A specifications to be tested. (A discussion of the potential uncertainties is given in following paragraphs.)

b. Use a highly stable *calibrated* standard and add the correction factors (given on the calibration chart) to the 3455A test readings.

c. Send the 3455A to an -hp- Service Center or some other NBS-certified standards facility for calibration.

4-19. Several of today's commercially available dc calibration standards provide the output voltage range and resolution needed to test the performance of the 3455A but they are not, in general, an order of magnitude more accurate than the 3455A. When using such standards it is important to be aware of the uncertainties or "ambiguities" that may be encountered. These potential ambiguities are described in the following paragraphs.

4-20. First, consider the case where a digital voltmeter (DVM) is to be tested for a full-scale accuracy of ± 0.01% of reading on its 1-volt range. The DVM is connected to a dc calibration standard whose specified accuracy is ± 0.001% of setting and with the standard set to +1.00000 V, the DVM reads +0.99992 V which is 0.008% low. The dc standard's specified accuracy is ten times better than the specification being tested and at 1 V its maximum error contribution to the DVM reading is 10 microvolt or 0.001%. If the standard is 0.001% low the actual DVM error is - 0.007%; if it is 0.001% high, the actual DVM error is - 0.009%. In either case the DVM is within its specification and, since this measurement is not a calibration but is only intended to verify that the DVM meets its specification, the standard's error can be ignored.

4-21. But what if the DVM reading is + 0.999908 V? Here, the DVM appears to be in tolerance (0.0092% low) but the margin is only 0.0008% which is less than the 0.001% maximum allowable error contribution of the standard. If the standard's output is 0.001% low, the actual DVM error is - 0.0082% rather than - 0.0092% so the DVM is within its specification. If, on the other hand, the standard's output is 0.001% high, the actual DVM error is - 0.102% and the DVM is slightly out of tolerance. Chances are good that the DVM is within its specification but the only way to tell for sure is to use a more accurate standard. As the example points out, there are regions of ambiguity even when the standard is ten times more accurate than the instrument being tested. With a ten-to-one error reduction, however, these regions are relatively narrow. In this case, the DVM could be out of tolerance but if so, its maximum out-of-tolerance error is only - 0.0002%. As long as the DVM reading is within specified tolerances, the maximum DVM error that can exist is ± 0.011% which is the sum of the maximum DVM error and the maximum allowable error of the standard. A potential deviation of ± 0.001% from the DVM specifications could, in many cases, be acceptable. Also, if the standard has been recently calibrated and is known to be well within its specification, readings in the narrow ambiguous regions may reflect marginal DVM performance or indicate the need for adjustment.

4-22. Now suppose the dc standard's specified accuracy is ± 0.0025% — only four times better than the ± 0.01% DVM accuracy specification. If the DVM reading is + 0.999890 volt, it appears that the DVM is 0.011% low. However, if the dc standard is 0.002% low (well within its specification) the DVM is only 0.009% low and is in tolerance. Conversely, if the DVM reading is + 1.00081 V the DVM appears to be 0.0081% high and well within its specification. But if the standard is 0.0023% low, the actual DVM error is + 0.014% and the DVM is out of tolerance.

4-23. Figure 4-1 shows how the error tolerances of the standard combine with those of the DVM to produce the positive and negative ambiguous regions used in the preceding examples. From Figure 4-1, the following observations can be made:

a. If the DVM *reading* is in tolerance by a percentage that is greater than the maximum allowable error of the standard, the DVM is definitely within its specification.

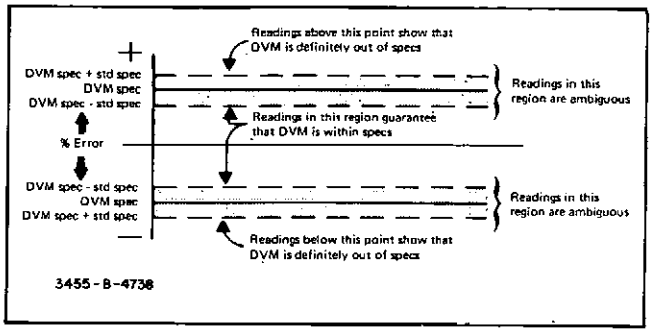

Figure 4-1. Ambiguous Regions.

b. If the DVM reading is out of tolerance by a percentage that is greater than the maximum allowable error of the standard, the DVM is definitely outside of its specification.

c. If the DVM reading is in or out of tolerance by a percentage that is less than the maximum allowable error of the standard, it is in one of the ambiguous regions (shaded areas) shown in Figure 4-1. The DVM may or may not be within its specification and the only way to tell for sure is to use a more accurate standard.

4-24. As the accuracy specifications of the standard approach the specifications of the DVM to be tested, the ambiguous regions shown in Figure 4-1 become wider and the uncertainty contributions of the standard become increasingly significant. If the standard is less than three or four times more accurate than the DVM, the performance test is not practical because the ambiguous regions cover most of the DVM's error range. From a practical standpoint, the dc standard should be at least five times more accurate than the 3455A specifications to be tested. If such a standard is not available, an alternative approach is to use a *calibrated* standard that is extremely stable and (preferably) two to four times more accurate than the 3455A. When this is done, the correction factors given on the dc standard's calibration chart must be algebraically added to the 3455A test readings. Test validity depends on the calibration uncertainties and the short-term stability of the standard.

4-25. The Reference Divider recommended in the following DC Voltmeter Accuracy Test is, according to its published specifications, accurate enough to test all but the 1- volt and 10- volt full-scale 24-hour specifications. The 1-volt and 10- volt full-scale specifications can be tested using the DC Transfer Standard also recommended in the procedure.

4-26. OPERATIONAL VERIFICATION TESTS.

4-27. DC OPERATIONAL ACCURACY TEST.

4-28. The DC Transfer Standard required for the following test must be calibrated to a 1.017 V to 1.019 V standard cell that has been calibrated by the National Bureau of Standards (NBS). If the 3455A is to be tested for its 24-hour accuracy specifications, the Transfer Standard must be adjusted for optimum 1-volt and 10-volt output accuracy using NBS-calibrated standards. It is recommended that the Transfer Standard be calibrated and adjusted just prior to use. After calibration, it should be left on and, if possible, kept in a controlled environment where the ambient temperature is within one or two degrees of the temperature in which it was calibrated. The following procedure should be performed in that same environment.

4-29. If the recommended DC Transfer Standard or its equivalent is not available, an NBS-calibrated standard cell (1.017 V to 1.019 V) can be substituted. If this is done, check the full-scale accuracy of the 3455A 1 V and 10 V ranges using the Reference Divider recommended in the procedure.

4-30. Test Procedure.

Equipment Required:

Reference Divider (Fluke Model 750A)
DC Transfer Standard (Fluke Model 731A)
DC Standard (Systron Donner Model M106A)
DC Null Voltmeter (-hp- Model 419A)

a. Set the 3455A controls as follows:

FUNCTION ..... DCV
RANGE ..... 1 V
HIGH RESOLUTION ..... ON
AUTO CAL ..... ON
GUARD ..... ON
TRIGGER ..... INTERNAL

b. Set the DC Transfer Standard for an output of 1 V. Connect the output of the transfer standard to the 3455A INPUT.

c. The 3455A reading should be within the test limits listed in Table 4-1, verifying its 1-volt full-scale accuracy with High Resolution on.

d. Set the 3455A RANGE to 10 V. The 3455A reading should be within the test limits listed in Table 4-3, verifying its 10-volt tenth scale accuracy with High Resolution on.

e. Set the Transfer Standard for an output of 10 V. The 3455A reading should be within the test limits listed in Table 4-1 verifying its 10-volt full scale accuracy with High Resolution on.

Table 4-1. DC Accuracy Test (1 V, 10 V Full Scale; High Resolution On).

Level	Range	24 Hour Test Limits	90 Day Test Limits
1 V	1 V	0.999966 to 1.000034	0.999936 to 1.000064
10 V	10 V	9.99977 to 10.00023	9.99947 to 10.00053

f. Set the 3455A HIGH RESOLUTION to OFF. The 3455A reading should be within the test limits listed in

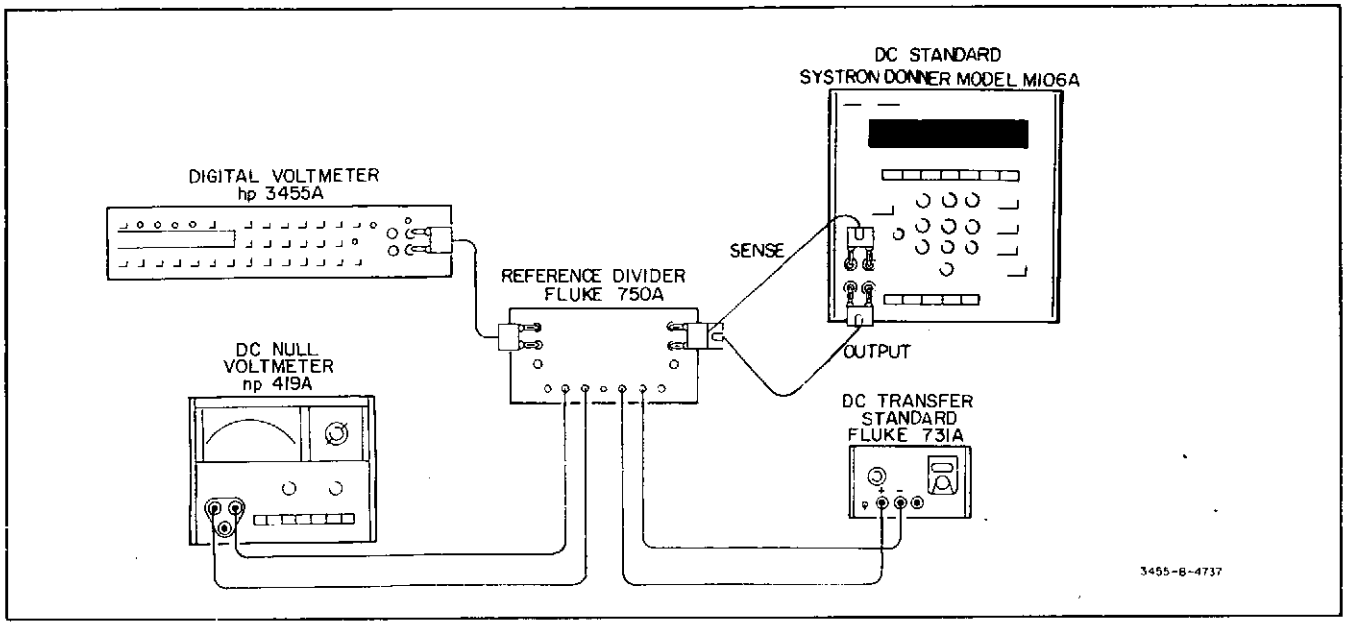

Figure 4-2. DC Accuracy Test.

Table 4-2, verifying its 10-volt full scale accuracy with High Resolution off.

g. Set the Transfer Standard for an output of 1 V and set the 3455A RANGE to 1 V. Set the 3455A GUARD to OFF; connect the 3455A GUARD terminal to the High INPUT terminal.

h. Reverse the 3455A INPUT connection to obtain a negative 1 V reading. Repeat steps c through f to verify the 1 V and 10 V full-scale accuracy for negative readings.

i. Disconnect the Transfer Standard from the 3455A INPUT. Disconnect the GUARD terminal from the High INPUT terminal and set the GUARD to ON.

j. Using short pieces of number 20 AWG (or thinner) insulated solid copper wire, connect the Transfer Standard and DC Null Voltmeter to the Reference Divider as shown in Figure 4-6.

k. Turn off the DC Standard's output. Using 24" (or shorter) shielded cables equipped with banana-plug connectors, connect the DC Standard and the 3455A to the Reference Divider as shown in Figure 4-2.

l. Set the Standard Cell Voltage controls on the Reference Divider to correspond to the calibrated standard-cell setting on the Transfer Standard. Set the Transfer Standard to output the calibrated standard-cell voltage.

m. Zero the DC Null Voltmeter on its 3 microvolt range and then set it to the 300 microvolt range.

n. Set the Reference Divider's Input Voltage switch to 1000 V and center its course and fine adjustment controls.

Set the Reference Divider's Output Voltage switch to 1000 V.

o. Set the 3455A controls as follows:

FUNCTION ..... DCV
RANGE..... 1 kV
HIGH RESOLUTION..... ON
GUARD ..... ON

CAUTION

The dc standard's output should be turned on and the voltage adjusted by upranging or downranging the standard whenever the standard's output needs to be changed. If a 3455A input voltage greater than 100 V is needed, the following procedure should always be followed.

p. Turn the dc standard's output on and by the following method adjust the standard for an output of + 1000.00 V:

1. Set the dc standard's first decade to "0".

2. Uprange the dc standard to the 1000 V range.

3. Increase the standard's first decade so that 1000 V is reached by increasing the voltage in 100 V increments.

q. Set the Reference Divider's Standard Cell switch to the Locked position. Adjust the dc standard's output

voltage and vernier controls for a zero reading on null meter.

r. Downrange the Null Meter and adjust the Reference Divider's course and fine controls for a null is obtained on the 3 microvolt range.

s. Set the Reference Divider's Standard Cell switch to Open. Allow ten minutes for the Reference Divider to warm-up and stablize.

t. Set the Reference Divider's Standard Cell switch to Momentary and, if necessary, readjust the fine control for a null indication. Release the Standard Cell switch.

u. The 3455A reading should be within the Test Limits given in Table 4-3. (1000 V, 1 kV range), verifying the full-scale accuracy at +1000 V with High Resolution on.

NOTE

AUTO-CAL may have to be turned off when making measurements on the 100 V and 1000 V ranges. This is only necessary when using a DC Standard sensitive to a changing load impedance.

Table 4-2. DC Accuracy Test (High Resolution Off).

Level	3455A Range	24 Hour Test Limits	90 Day Test Limits
0.1 V	0.1 V	.099992 to 1.00008	.099989 to .100011
10 V	10 V	9.9997 to 10.0003	9.9994 to 10.0006

NOTE

Each time the Reference Divider Output Voltage setting is changed, check for null and, if necessary, readjust the Reference Divider's fine control to obtain a null indication.

CAUTION

Always downrange the Reference Divider before downranging the 3455A. When upranging, always uprange the 3455A before upranging the Reference Divider.

Table 4-3. DC Accuracy Test (High Resolution On).

Divider Output	3455A Range	24 Hour Test Limits	90 Day Test Limits
1000 V*	1000 V	999.957 to 1000.043	999.927 to 1000.073
100 V	100 V	99.9957 to 100.0043	99.9927 to 100.0073
5 V	10 V	4.99987 to 5.00013	4.99972 to 5.00028
1 V	10 V	0.99995 to 1.00005	0.99992 to 1.00008

*For positive readings only. Do not apply negative voltages greater than - 500 V dc.

v. Set the Reference Divider's Output Voltage and 3455A RANGE to each setting (100 V and below) listed in Tables 4-2 and 4-3 with High Resolution on or off as indicated. At each setting, the 3455A reading should be within the Test Limits given in the table. (Be sure to maintain null when the Reference Divider's output is changed.)

CAUTION

In the following tests for negative readings, the input to the 3455A must not exceed -500 V dc, due to the ± 500 V guard to chassis limitation.

w. Downrange the dc standard to 1 V output and turn off the dc standard's output. Reverse the polarity of the 3455A INPUT connection to obtain negative readings. Turn the dc standard's output back on. Verify the negative dc accuracy for all settings 100 V and lower. Again, *do not apply more than -500 V dc to the 3455A INPUT.*

4-31. AC Operational Accuracy Test.

4-32. The 3455A ac voltmeter accuracy can be verified for frequencies up to 100 kHz on all voltage ranges using an AC Calibrator such as the -hp- Model 745A/746A. To minimize measurement uncertainties for frequencies below 50 Hz and above 20 kHz, the AC Calibrator should be calibrated and its error measurement control should be used to adjust out the errors indicated on the calibration chart. For example, if the calibration chart indicates that the 745A output is 0.04% high at 1 V, 50 kHz, set the 745A error measurement control to +0.04% to obtain a precise 1 V output. The 745A/746A can be calibrated during a routine performance test using the procedures outlined in the 745A/746A Operating and Service Manuals. Calibration charts for these instruments are normally valid for at least 30 days.

4-33. A Test Oscillator such as the -hp- Model 652A can be used to verify the ac voltmeter accuracy of the 3455A for frequencies above 100 kHz (specified for 1 V and 10 V ranges only). The required accuracy can be obtained by adjusting the Test Oscillator output so that the 3455A reading at 10 kHz is the same as the reading obtained with the highly accurate AC Calibrator. This reference level can then be maintained to within ± 0.25% over the 100 kHz to 1 MHz range using the expanded-scale meter on the Test Oscillator. If higher accuracy is desired, an ac-to-dc thermal transfer technique (Figure 4-3) can be used.

4-34. Test Procedure.

Equipment Required:

AC Calibrator (-hp- Model 745A/746A)
Test Oscillator (-hp- Model 652A)

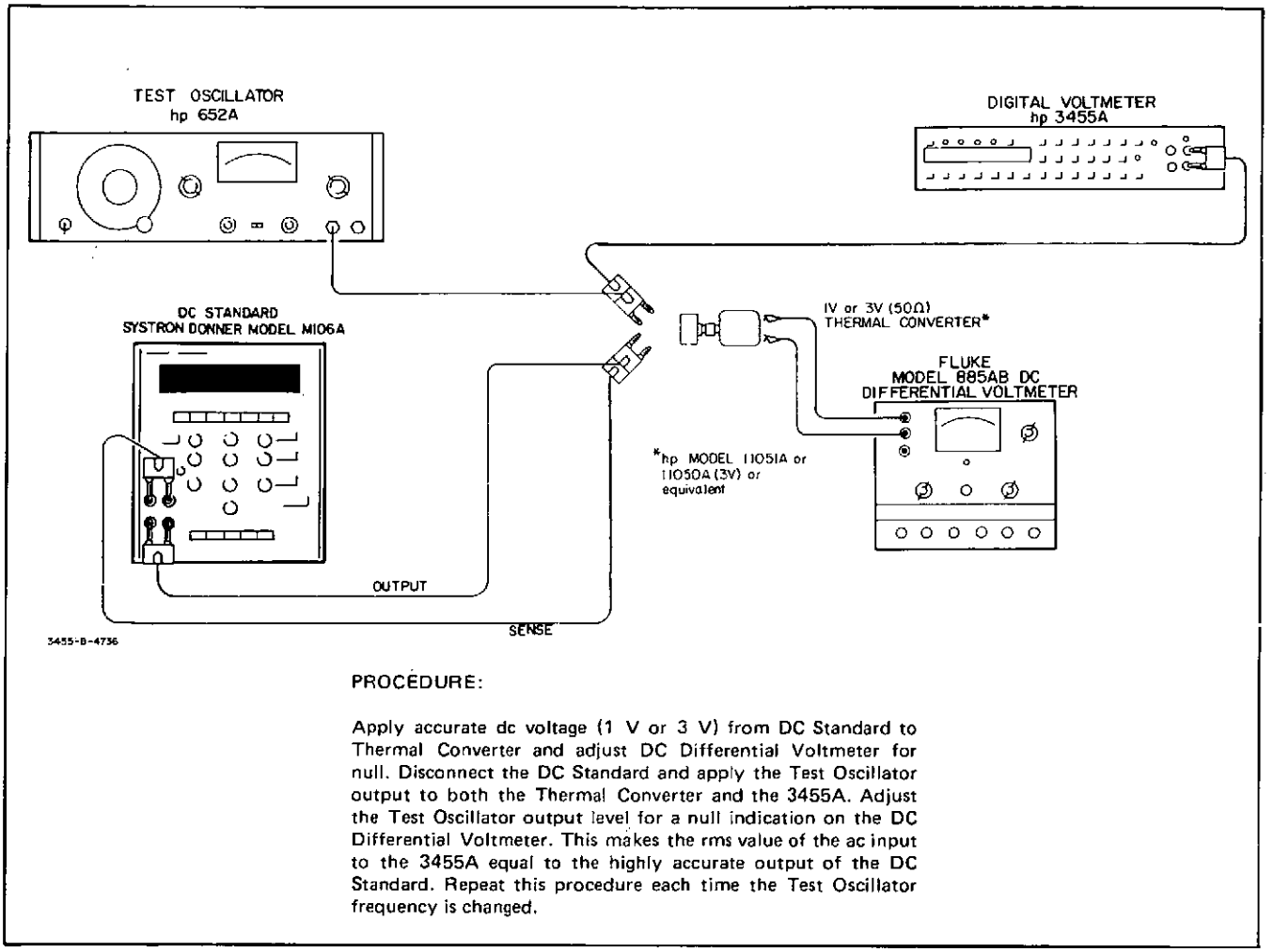

Figure 4-3. AC/DC Thermal Transfer Measurement (Alternate Frequency Response Test).

a. Set the 3455A controls as follows:

FUNCTION ..... ACV
RANGE ..... 1 V
GUARD ..... ON
INPUT SELECT ..... FRONT

b. Set the AC Calibrator for an output of 1 V, 30 Hz (745A 1 V range). Set the AC Calibrator's error measurement control to offset the 1 V, 30 Hz error indicated on the calibration chart (745A 0.1 error range).

c. Connect the output of the AC Calibrator to the 3455A front panel INPUT.

d. 1. Standard Model 3455A: The 3455A 1 V, 30 Hz reading should be within the Test Limits listed in Table 4-4.

2. 3455A Option 001: The 3455A 1 V, 30 Hz (ACV) reading should be within the Test Limits listed in Table 4-6.

e. 1. Standard Model 3455A: Using the AC Calibrator, verify the 3455A ac voltmeter accuracy for each Test Frequency, Input Level and 3455A Range listed in Table 4-4. The 3455A display readings should be within the Test Limits given in the table.

2. 3455A Option 001: Using the AC Calibrator, verify the 3455A ac voltmeter accuracy for each Test Frequency (ACV), Input Level and 3455A Range listed in Table 4-6. The 3455A display readings should be within the Test Limits given in the table.

f. Set the 3455A FUNCTION to FAST ACV.

g. 1. Standard Model 3455A: Using the AC Calibrator, verify the 3455A ac voltmeter accuracy (Fast ACV) for each Test Frequency above 10 kHz, each Input Level and 3455A Range listed in Table 4-4. The 3455A display readings should be within the Test Limits given in the table.

2. 3455A Option 001: Using the AC Calibrator,

Table 4-4. AC Accuracy Test 30 Hz to 100 kHz (Standard Model 3455A only).

Test Frequency	Input Level	3455A Range	24 Hour** Test Limits	90 Day** Test Limits
30 Hz*	1 V	1 V	0.99920 to 1.00080	0.99900 to 1.00100
100 kHz	1 V	1 V	0.99520 to 1.00480	0.99400 to 1.00600
30 Hz*	5 V	10 V	4.9940 to 5.0060	4.9925 to 5.0075
100 kHz	5 V	10 V	4.9720 to 5.0280	4.9650 to 5.0350
30 Hz*	10 V	10 V	9.9920 to 10.0080	9.9900 to 10.0100
20 kHz	10 V	10 V	9.9920 to 10.0080	9.9900 to 10.0100
100 kHz	10 V	10 V	9.9520 to 10.0480	9.9400 to 10.0600
30 Hz*	100 V	100 V	99.920 to 100.080	99.900 to 100.100
100 kHz	100 V	100 V	99.520 to 100.480	99.400 to 100.600
30 Hz*	1000 V	1000 V	998.00 to 1002.00	997.50 to 1002.50
10 kHz	1000 V	1000 V	998.00 to 1002.00	997.50 to 1002.50

*Frequencies below 300 Hz apply to ACV Function only.
**These test limits do not include the temperature coefficients that must be added if the instrument is operated outside of the temperature range over which the 24-hour or 90-day specifications apply (see Table 1-1). Derive 6-month test limits from AC Accuracy specifications listed in Table 1-1.

verify the 3455A ac voltmeter accuracy for each Test Frequency (Fast ACV), Input Level and 3455A Range listed in Table 4-6. The 3455A display readings should be within the Test Limits given in the table.

h. Set the AC Calibrator for an output of 1 V, 10 kHz. Set the 3455A FUNCTION to ACV and RANGE to 1 V.

i. Record the 3455A reading:.. V.

j. Set the 3455A FUNCTION to FAST ACV. Record the 3455A reading:.. V.

k. Set the 3455A FUNCTION to ACV and RANGE to 10 V. Set the AC Calibrator for an output of 5 V, 10 kHz.

l. Record the 3455A reading:.. V.

m. Set the 3455A FUNCTION to FAST ACV. Record the 3455A reading:.. V.

n. Disconnect the AC Calibrator from the 3455A. Set the 3455A FUNCTION to ACV and RANGE to 1 V.

o. Set the Test Oscillator for an output of 1 V, 10 kHz. Connect the 50-ohm output of the Test Oscillator, terminated in a 50 ohm load, to the 3455A front panel INPUT.

p. Adjust the Test Oscillator level controls for a 3455A reading as close as possible to the reading recorded in Step i. Set the Test Oscillator's meter switch to expanded scale and adjust the meter reference controls for a zero reading on the Test Oscillator's meter. Use the Test Oscillator's level controls to maintain this zero reading whenever the Test Oscillator frequency is varied.

q. 1. Standard Model 3455A: Set the Test Oscillator to 1 MHz (maintain reference level on meter of Test Oscillator). The 3455A display reading should be within the Test Limits given in Table 4-5.

2. 3455A Option 001: Set the Test Oscillator frequency to 250 kHz (maintain reference level on meter of Test Oscillator). The 3455A display reading should be between 0.99240 V and 1.00760 V (24-hour spec.) or between 0.99190 V and 1.00810 V (90-day spec.).

r. Set the 3455A FUNCTION to FAST ACV. Set the Test Oscillator frequency to 10 kHz and adjust its output level for the 3455A reading recorded in step j. Adjust the meter reference controls for a zero reading on

Table 4-5. AC Accuracy Tests 100 kHz to 1 MHz (Standard Model 3455A only).

Test Frequency	Input Level	3455A Range	24 Hour* Test Limits	90 Day* Test Limits
1 MHz	1 V	1 V	0.92400 to 1.07600	0.90900 to 1.09100
1 MHz	5 V	10 V	4.4900 to 5.5100	4.3900 to 5.6100
350 kHz	5 V	10 V	4.7600 to 5.2400	4.7000 to 5.3000

*These test limits do not include the temperature coefficients that must be added if the instrument is operated outside of the temperature range over which the 24-hour or 90-day specifications apply (see Table 1-1). Derive 6-month test limits from AC Accuracy specifications listed in Table 1-1.

Table 4-6. AC Accuracy Test 30 Hz to 100 kHz (3455A Option 001 only).

Frequency (ACV)	Frequency (FAST ACV)	Input Level	3455A Range	24 Hour* Test Limits	90 Day* Test Limits
30 Hz	300 Hz	1 V	1 V	0.99460 to 1.00540	0.99430 to 1.00570
50 Hz	500 Hz	1 V	1 V	0.99630 to 1.00370	0.99600 to 1.00400
250 kHz	250 kHz	1 V	1 V	0.99240 to 1.00760	0.99190 to 1.00810
30 Hz	300 Hz	5 V	10 V	4.9695 to 5.0305	4.9680 to 5.0320
100 kHz	100 kHz	5 V	10 V	4.9930 to 5.0070	4.9925 to 5.0075
250 kHz	250 kHz	5 V	10 V	4.9590 to 5.0410	4.9565 to 5.0435
30 Hz	300 Hz	10 V	10 V	9.9460 to 10.0540	9.9430 to 10.0570
100 Hz	1 kHz	10 V	10 V	9.9885 to 10.0115	9.9875 to 10.0125
100 kHz	100 kHz	10 V	10 V	9.9885 to 10.0115	9.9875 to 10.0125
30 Hz	300 Hz	100 V	100 V	99.460 to 100.540	99.430 to 100.570
100 kHz	100 kHz	100 V	100 V	99.885 to 100.115	99.875 to 100.125
30 Hz	300 Hz	1000 V	1000 V	994.60 to 1005.40	994.30 to 1005.70
10 kHz	10 kHz	1000 V	1000 V	998.75 to 1001.25	998.65 to 1001.35

*These test limits do not include the temperature coefficients that must be added if the instrument is operated outside of the temperature range over which the 24-hour or 90-day specifications apply (see Table 1-1). Derive 6-month test limits from AC Accuracy specifications listed in Table 1-1.

the meter of the Test Oscillator and use control to maintain this reading whenever the frequency is varied.

s. Repeat step q.

t. Set the 3455A FUNCTION to ACV and RANGE to 10 V. Remove the 50-ohm termination from the Test Oscillator's output. Connect the 50-ohm output of the Test Oscillator (unterminated) to the 3455A front panel INPUT. Set the Test Oscillator frequency to 10 kHz and adjust its level controls for the 5 volt 3455A reading recorded in step 1. Adjust the meter reference controls for a zero reading on the meter of the Test Oscillator and use the level controls to maintain this reading whenever the frequency is varied.

u. 1. Standard Model 3455A: Set the Test Oscillator to each of the last two Test Frequencies listed in Table 4-5 (maintain reference level on meter of Test Oscillator). At each frequency setting, the 3455A reading should be within the Test Limits given in the table.

2. 3455A Option 001. Set the Test Oscillator frequency to 250 kHz (maintain reference level on meter of Test Oscillator). The 3455A display reading should be between 4.9590 V and 5.0410 V (24-hour spec.) or between 4.9565 V and 5.0435 V (90-day spec.).

v. Set the 3455A FUNCTION to FAST ACV. Set the Test Oscillator frequency to 10 kHz and adjust its level controls for the 5 V 3455A reading recorded in step m. Adjust the meter reference controls for a zero reading on the meter of the Test Oscillator and use the level controls to maintain this reading whenever the frequency is varied.

w. Repeat step u.

Table 4-7. Two-Wire Ohm Accuracy Test.

		Test Limits (High Res. On)	
Decade Resistor	3455A Range	24 Hour*	90 Day*
100 kΩ	100	99.9971 to 100.0029	99.9955 to 100.0045

*These test limits do not include the temperature coefficients that must be added if the instrument is operated outside of the temperature range over which the 24-hour or 90-day specifications apply (see Table 1-1). Derive 6-month test limits from Ohms Accuracy specifications listed in Table 1-1.

x. This completes the AC Voltmeter Accuracy Test. Disconnect the Test Oscillator from the 3455A.

4-35. Ohmmeter Accuracy Test.

4-36. This test requires a *calibrated* decade resistor with settings that range from 100 ohms to 10 megohms. The correction factors indicated on the decade resistor's calibration chart must be *algebraically* added to the 3455A display readings to achieve the required test accuracy.

4-37. Test Procedure.

Equipment Required:

Decade Resistor (calibrated General Radio Model 1433Z)

a. Set the 3455A controls as follows:

FUNCTION ..... 2 WIRE K OHM
RANGE 100
HIGH RESOLUTION ..... ON
GUARD ..... ON

Table 4-8. Four-Wire Ohms Accuracy Test.

		(A) Test Limits (High Res. Off)		(B) Test Limits (High Res. On)	
Decade Resistor	3455A Range	24 Hour*	90 Day*	24 Hour*	90 Day*
100 Ω	0.1	0.099993 to 0.100007	0.099990 to 0.100010	———	———
1 kΩ	1	———	———	0.999971 to 1.000029	0.999960 to 1.000040
10 kΩ	10	———	———	9.99951 to 10.00049	9.99935 to 10.00065
100 kΩ	100	———	———	99.9975 to 100.0025	99.9959 to 100.0041
1 MΩ	1 K	———	———	999.876 to 1000.124	999.860 to 1000.140
10 MΩ	10 K	———	———	9989.96 to 10010.04	9989.95 to 10010.05

*These test limits do not include the temperature coefficients that must be added if the instrument is operated outside of the temperature range over which the 24-hour or 90-day specifications apply (see Table 1-1). Derive 6-month test limits from Ohms Accuracy specifications listed in Table 1-1.

b. Using a shielded cable equipped with banana-plug connectors, connect the Decade Resistor to the INPUT of the 3455A. Set the Decade Resistor to 100 K ohms.

c. Algebraically add the Decade Resistor's correction factor to the 3455A reading. The algebraic sum should be within the test Limits given in Table 4-7, verifying the 3455A 2-wire ohms accuracy.

d. Set the 3455A controls as follows:

FUNCTION ..... 4 WIRE K OHM
RANGE 0.1
HIGH RESOLUTION ..... OFF

e. Set the Decade Resistor to 100 ohms. Connect a shielded cable, equipped with banana-plug connectors, between the 3455A OHM SIGNAL output and the input of the Decade Resistor. (Leave the other cable connected between the 3455A INPUT and the input of the Decade Resistor).

f. Algebraically add the Decade Resistor's correction factor to the 3455A reading. The algebraic sum should be within the Test Limits given in Table 4-8 (A), verifying the 3455A 4-wire ohms accuracy with High Resolution off.

g. Set the 3455A RANGE to 1 and HIGH RESOLUTION to ON. Set the Decade Resistor to 1,000 ohms.

h. Algebraically add the Decade Resistor's correction factor to the 3455A reading. The algebraic sum should be within the Test Limits given in Table 4-8(B), verifying the 3455A 4-wire ohms accuracy with High Resolution on.

i. Repeat Step h for each additional Decade Resistor setting and 3455A Range listed in Table 4-8 (B).

4-38. DC VOLTMETER INPUT RESISTANCE TEST.

Equipment Required:

DC Standard Systron Donner Model M106A
Resistor (1 MΩ ± 0.01% 1/4 W -hp- part number 0811-0202)

a. Connect the low output of the DC Standard to the Low Input terminal of the 3455A. Using short clip leads insert the 1 megohm resistor in series between the DC Standard's high output and the High INPUT terminal of the 3455A. Connect a clip lead across the resistor.

b. Set the 3455A controls as follows:

FUNCTION ..... DCV
RANGE ..... 10 V
HIGH RESOLUTION ..... ON
GUARD ..... ON

c. Adjust the DC Standard for a 3455A reading of + 10.00000 V.

d. Remove the clip lead from across the 1 megohm resistor.

e. The 3455A reading should be between 9.99900 V and 10.00000 V, verifying that the input resistance is greater than 10^{10} ohms.

f. Set the 3455A RANGE to 100 V; AUTO-CAL off. Reconnect the clip lead across the 1 megohm resistor.

g. Adjust the DC Standard for a 3455A reading of + 10.00000 V.

h. Remove the clip lead from across the 1 megohm resistor.

i. The 3455A reading should be between + 9.0900 V and + 9.0917 V, verifying that the input resistance is 10 megohms ± 0.1%.

4-39 PERFORMANCE TEST.

4-40. DC VOLTMETER ACCURACY TEST.

4-41. The DC Transfer Standard required for the following test must be calibrated to a 1.017 V to 1.019 V standard cell that has been calibrated by the National Bureau of Standards (NBS). If the 3455A is to be tested for its 24-hour accuracy specifications, the Transfer Standard must be adjusted for optimum 1-volt and 10-volt output accuracy using NBS-calibrated standards. It is recommended that the Transfer Standard be calibrated and adjusted just prior to use. After calibration, it should be left on and, if possible, kept in a controlled environment where the ambient temperature is within one or two degrees of the temperature in which it was calibrated. The following procedure should be performed in that same environment.

4-42. If the recommended DC Transfer Standard or its equivalent is not available, an NBS-calibrated standard cell (1.017 V to 1.019 V) can be substituted. If this is done, check the full-scale accuracy of the 3455A 1 V and 10 V ranges using the Reference Divider recommended in the procedue.

4-43. Test Procedure.

Equipment Required:

Reference Divider (Fluke Model 750A)
DC Transfer Standard (Fluke Model 731A)
DC Standard (Systron Donner Model M106A)
DC Null Voltmeter (-hp- Model 419A)

a. Set the 3455A controls as follows:

FUNCTION ..... DCV
RANGE ..... 1 V
HIGH RESOLUTION ..... OFF
AUTO CAL ..... ON
GUARD ..... ON
TRIGGER ..... INTERNAL

b. Set the DC Transfer Standard for an output of 1 V. Connect the output of the transfer standard to the 3455A INPUT.

c. The 3455A reading should be within the test limits listed in Table 4-9, verifying its 1-volt full-scale accuracy with High Resolution off.

Table 4-9. DC Accuracy Test (1 V, 10 V Full-Scale; High Resolution Off).

Input Level	3455A Range	24 Hour Test Limits	90 Day Limits
1 V	1 V	0.99996 to 1.00004	0.99993 to 1.00007
10 V	10 V	9.9997 to 10.0003	9.9994 to 10.0006

d. Set the 3455A HIGH RESOLUTION to ON. The 3455A reading should be within the test limits listed in Table 4-10, verifying its 1-volt full scale accuracy with High Resolution on.

e. Set the 3455A RANGE to 10 V. Set the Transfer Standard for an output of 10 V. The 3455A reading should be within the test limits listed in Table 4-10, verifying its 10-volt full scale accuracy with High Resolution on.

Table 4-10. DC Acuracy Test (1 V, 10 V Full Scale; High Resolution On).

Level	Range	24 Hour Test Limits	90 Day Test Limits
1 V	1 V	0.999966 to 1.000034	0.999936 to 1.000064
10 V	10 V	9.99977 to 10.00023	9.99947 to 10.00053

f. Set the 3455A HIGH RESOLUTION to OFF. The 3455A reading should be within test limits listed in Table 4-9, verifying its 10-volt full scale accuracy with High Resolution off.

g. Set the Transfer Standard for an output of 1 V and set the 3455A RANGE to 1 V. Set the 3455A GUARD to OFF; connect the 3455A GUARD terminal to the High INPUT terminal.

h. Reverse the 3455A INPUT connection to obtain a negative 1 V reading. Repeat Steps c through f to verify the 1 V and 10 V full-scale accuracy for negative readings.

i. Disconnect the Transfer Standard from the 3455A INPUT. Disconnect the GUARD terminal from the High INPUT terminal and set the GUARD to ON.

j. Using short pieces of number 20 AWG (or thinner) insulated solid copper wire, connect the Transfer Standard and DC Null Voltmeter to the Reference Divider as shown in Figure 4-4.

k. Turn off the DC Standard's output. Using 24" (or shorter) shielded cables equipped with banana-plug connectors, connect the DC Standard and the 3455A to the Reference Divider as shown in Figure 4-4.

l. Set the Standard Cell Voltage controls on the Reference Divider to correspond to the calibrated standard-cell setting on the Transfer Standard. Set the Transfer Standard to output the calibrated standard-cell voltage.

m. Zero the DC Null Voltmeter on its 3 microvolt range and then set it to the 300 microvolt range.

n. Set the Reference Divider's Input Voltage switch to 1000 V and center its course and fine adjustment controls. Set the Reference Divider's Output Voltage switch to 1000 V.

o. Set the 3455A controls as follows:

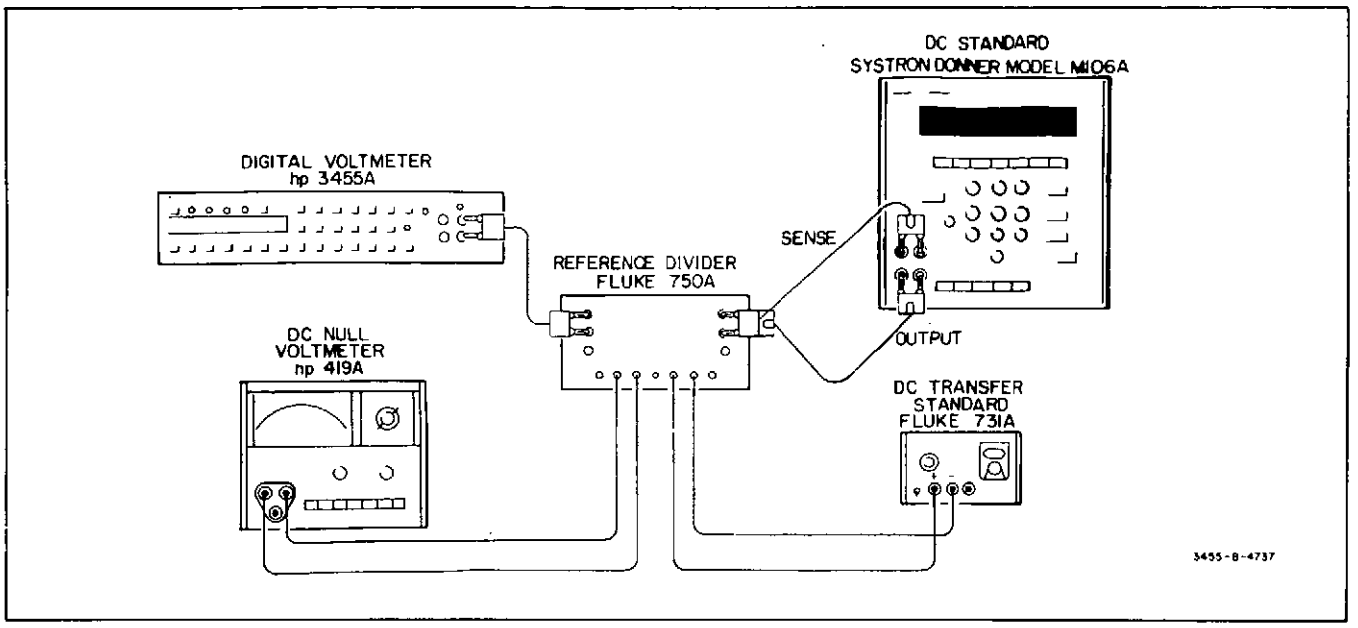

Figure 4-4. DC Accuracy Test.

FUNCTION ..... DCV
RANGE ..... 1 kV
HIGH RESOLUTION ..... OFF
GUARD ..... ON

CAUTION

The dc standard's output should be turned on and the voltage adjusted by upranging or downranging the standard whenever the standard's output needs to be changed. If a 3455A input voltage greater than 100 V is needed, the following procedure should always be followed.

p. Turn the dc standard's output on and by the fol lowing method adjust the standard for an output of + 1000.00 V:

1. Set the dc standard's first decade to "0".

2. Uprange the dc standard to the 1000 V range.

3. Increase the standard's first decade so that 1000 V is reached by increasing the voltage in 100 V increments.

q. Set the Reference Divider's Standard Cell switch to the Locked position. Adjust the DC Standard's output voltage and vernier controls for a zero reading on the null meter.

r. Downrange the Null Meter and adjust the Reference Divider's coarse and fine controls for a null indication. Repeat until a null is obtained on the 3 microvolt range.

s. Set the Reference Divider's Standard Cell switch to Open. Allow ten minutes for the Reference Divider to warmup and stabilize.

Table 4-11. DC Accuracy Test (High Resolution Off).

Divider Output	3455A Range	24 Hour Test Limits	90 Day Test Limits
1000 V*	1000 V	999.95 to 1000.05	999.92 to 1000.08
500 V	1000 V	499.97 to 500.03	499.96 to 500.04
100 V	100 V	99.995 to 100.005	99.992 to 100.008
0.1 V	0.1 V	.099992 to 1.00008	.099989 to .100011

*For positive readings only. Do not apply negative voltages greater than -500 V dc.

Table 4-12. DC Accuracy Test (High Resolution On).

Divider Output	3455A Range	24 Hour Test Limits	90 Day Test Limits
1000 V*	1000 V	999.957 to 1000.043	999.927 to 1000.073
500 V	1000 V	499.977 to 500.023	499.962 to 500.038
100 V	1000 V	99.993 to 100.007	99.990 to 100.010
100 V	100 V	99.9957 to 100.0043	99.9927 to 100.0073
50 V	100 V	49.9977 to 50.0023	49.9962 to 50.0038
10 V	100 V	9.9993 to 10.0007	9.9990 to 10.0010
5 V	10 V	4.99987 to 5.00013	4.99972 to 5.00028
1 V	10 V	0.99995 to 1.00005	0.99992 to 1.00008
0.5 V	1 V	0.499981 to 0.500019	0.499966 to 0.500034
0.1 V	1 V	0.099993 to 0.100007	0.099990 to 0.100010

*For positive readings only. Do not apply negative voltages greater than -500 V dc.

t. Set the Reference Divider's Standard Cell switch to Momentary and, if necessary, readjust the fine control for a null indication. Release the Standard Cell switch.

NOTE

AUTO-CAL may have to be turned off

when making measurements on the 100 V and 1000 V ranges. This is only necessary when using a DC Standard sensitive to a changing load impedance.

u. The 3455A reading should be within the Test Limits given in Table 4-11 (1000 V, 1 kV range), verifying the full-scale accuracy at +1000 V with High Resolution off.

v. With the 3455A on the 1 kV range, set the HIGH RESOLUTION to ON.

w. The 3455A reading should be within the Test Limits given in Table 4-12 (1000 V, 1 kV range), verifying the full scale accuracy at +1000 V with High Resolution on.

NOTE

Each time the Reference Divider Output Voltage setting is changed, check for null and, if necessary, readjust the Reference Divider's fine control to obtain a null indication.

CAUTION

Always downrange the Reference Divider before downranging the 3455A. When upranging, always uprange the 3455A before upranging the Reference Divider.

x. Set the DC Standard for an output of +500 V.

y. Set the Reference Dividers Input Voltage switch to 500 V and center the course and fine adjustment controls. Set the Reference Dividers Output Voltage switch to 500 V.

z. Adjust the DC Standard and Reference divider as outlined in Steps q through t.

aa. Set the Reference Divider's Output Voltage and 3455A RANGE to each setting (500 V and below) listed in Table 4-12. At each setting, the 3455A reading should be within the Test Limits given in the table. (Be sure to maintain null when the Reference Divider's output is changed.)

bb. Set the 3455A RANGE to 1 kV and set HIGH RESOLUTION to OFF.

cc. Set the Reference Divider's Output Voltage and 3455A RANGE to each setting (500 V and below) listed in Table 4-11. At each setting, the 3455A reading should be within the Test Limits given in the table. (Be sure to maintain null when the Reference Dividers output is changed.)

CAUTION

In the following tests for negative readings, the input to the 3455A must not exceed -500 V dc due to the ± 500 V guard to chassis limitation.

dd. Downrange the dc standard to 1 V output and turn off the dc standard's output. Reverse the polarity of the 3455A INPUT connection to obtain negative readings.

ee. Set the 3455A RANGE to 1 kV and HIGH RESOLUTION to ON. Set the Reference Divider Output Voltage switch to 500 V, turn the dc standard's output back on, and uprange to 500 V.

ff. Repeat Steps aa through cc to verify the negative dc accuracy for all settings 500 V and lower. Again, *do not apply more than -500 V dc to the 3455A INPUT.*

4-44. AC Voltmeter Accuracy Test.

4-45. The 3455A ac voltmeter accuracy can be verified for frequencies up to 100 kHz on all voltage ranges using an AC Calibrator such as the -hp- Model 745A/746A. To minimize measurement uncertainties for frequencies below 50 Hz and above 20 kHz, the AC Calibrator should be calibrated and its error measurement control should be used to adjust out the errors indicated on the calibration chart. For example, if the calibration chart indicates that the 745A output is 0.04% high at 1 V, 50 kHz, set the 745A error measurement control to +0.04% to obtain a precise 1 V output. The 745A/746A can be calibrated during a routine performance test using the procedures outlined in the 745A/746A Operating and Service Manuals. Calibration charts for these instruments are normally valid for at least 30 days.

4-46. A Test Oscillator such as the -hp- Model 652A can be used to verify the ac voltmeter accuracy of the 3455A for frequencies above 100 kHz (specified for 1 V and 10 V ranges only). The required accuracy can be obtained by adjusting the Test Oscillator output so that the 3455A reading at 10 kHz is the same as the reading obtained with the highly accurate AC Calibrator. This reference level can then be maintained to within ± 0.25% over the 100 kHz to 1 MHz range using the expanded-scale meter on the Test Oscillator. If higher accuracy is desired, an ac-to-dc thermal transfer technique (Figure 4-5) can be used.

4-47. Test Procedure.

Equipment Required:

AC Calibrator (-hp- Model 745A/746A)
Test Oscillator (-hp- Model 652A)

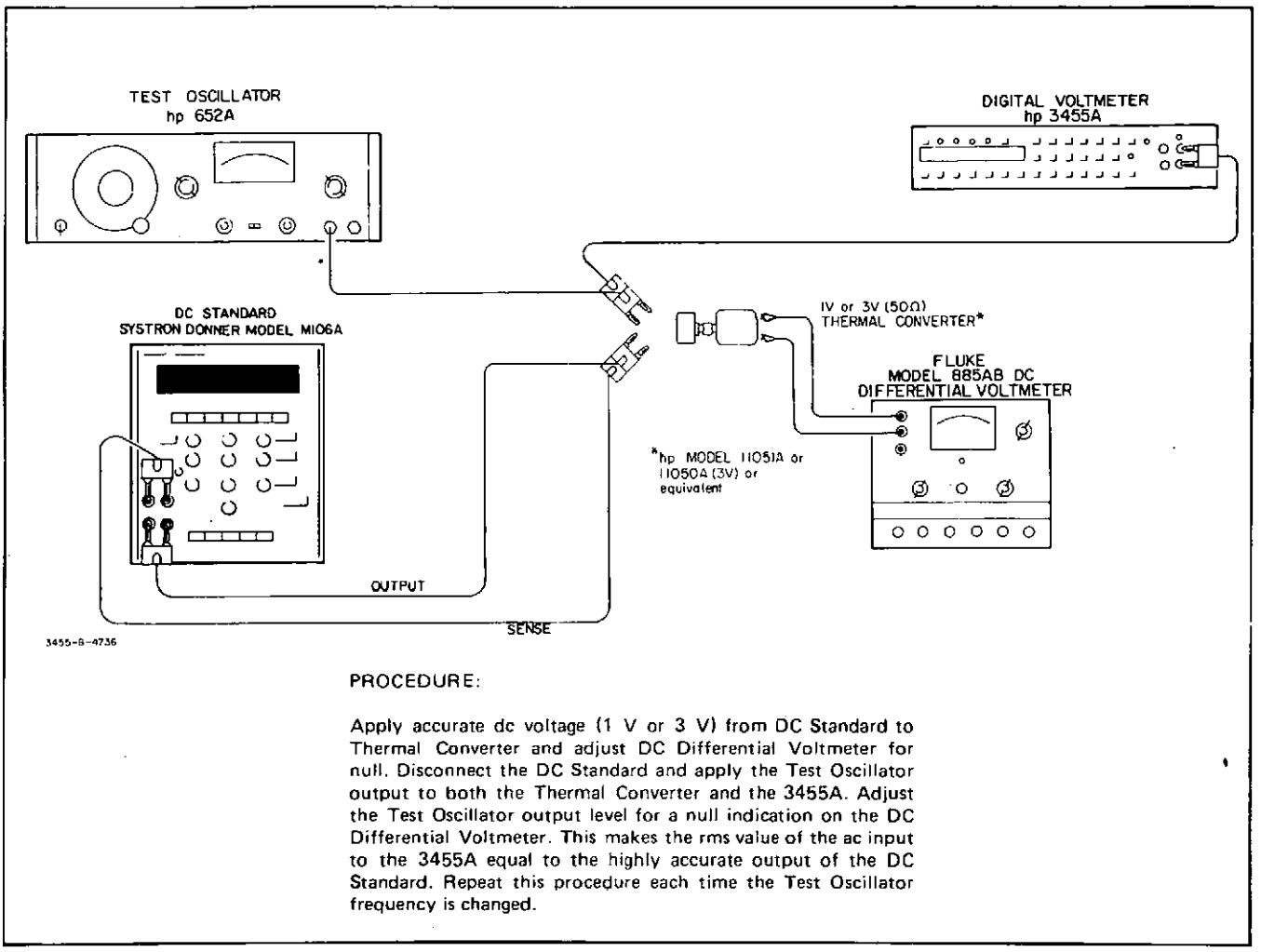

Figure 4-5. AC/DC Thermal Transfer Measurement (Alternate Frequency Response Test).

a. Set the 3455A controls as follows:

FUNCTION ..... ACV
RANGE ..... 1 V
GUARD ..... ON
INPUT SELECT ..... FRONT

b. Set the AC Calibrator for an output of 1 V, 30 Hz (745A 1 V range). Set the AC Calibrator's error measurement control to offset the 1 V, 30 Hz error indicated on the calibration chart (745A 0.1 error range).

c. Connect the output of the AC Calibrator to the 3455A front panel INPUT.

d. 1. Standard Model 3455A: The 3455A 1 V, 30 Hz reading should be within the Test Limits listed in Table 4-13.

2. 3455A Option 001: The 3455A 1 V, 30 Hz (ACV) reading should be within the Test Limits listed in Table 4-15.

e. 1. Standard Model 3455A: Using the AC Calibrator, verify the 3455A ac voltmeter accuracy for each Test Frequency, Input Level and 3455A Range listed in Table 4-13. The 3455A display readings should be within the Test Limits given in the table.

2. 3455A Option 001: Using the AC Calibrator, verify the 3455A ac voltmeter accuracy for each Test Frequency (ACV), Input Level and 3455A Range listed in Table 4-15. The 3455A display readings should be within the Test Limits given in the table.

f. Set the 3455A FUNCTION to FAST ACV.

g. 1. Standard Model 3455A: Using the AC Calibrator, verify the 3455A ac voltmeter accuracy (Fast ACV) for each Test Frequency above 100 Hz, each Input Level and 3455A Range listed in Table 4-13. The 3455A display readings should be within the Test Limits given

Table 4-13. AC Accuracy Test 30 Hz to 100 kHz (Standard Model 3455A only).

Test Frequency	Input Level	3455A Range	24 Hour** Test Limits	90 Day** Test Limits
30 Hz*	1 V	1 V	0.99920 to 1.00080	0.99900 to 1.00100
300 Hz	1 V	1 V		
10 kHz	1 V	1 V		
20 kHz	1 V	1 V		
50 kHz	1 V	1 V	0.99520 to 1.00480	0.99400 to 1.00600
100 kHz	1 V	1 V		
30 Hz*	5 V	10 V	4.9940 to 5.0060	4.9925 to 5.0075
300 Hz	5 V	10 V		
20 kHz	5 V	10 V		
100 kHz	5 V	10 V	4.9720 to 5.0280	4.9650 to 5.0350
30 Hz*	10 V	10 V	9.9920 to 10.0080	9.9900 to 10.0100
50 Hz*	10 V	10 V		
100 Hz*	10 V	10 V		
500 Hz	10 V	10 V		
1 kHz	10 V	10 V		
5 kHz	10 V	10 V		
10 kHz	10 V	10 V		
20 kHz	10 V	10 V		
50 kHz	10 V	10 V	9.9520 to 10.0480	9.9400 to 10.0600
100 kHz	10 V	10 V		
30 Hz*	100 V	100 V	99.920 to 100.080	99.900 to 100.100
300 Hz	100 V	100 V		
10 kHz	100 V	100 V		
20 kHz	100 V	100 V		
100 kHz	100 V	100 V	99.520 to 100.480	99.400 to 100.600
30 Hz*	1000 V	1000 V	998.00 to 1002.00	997.50 to 1002.50
300 Hz	1000 V	1000 V		
10 kHz	1000 V	1000 V		

*Frequencies below 300 Hz apply to ACV Function only.

**These test limits do not include the temperature coefficients that must be added if the instrument is operated outside of the temperature range over which the 24-hour or 90-day specifications apply (see Table 1-1). Derive 6-month test limits from AC Accuracy specifications listed in Table 1-1.

in the table.

2. 3455A Option 001: Using the AC Calibrator, verify the 3455A ac voltmeter accuracy for each Test Frequency (Fast ACV), Input Level and 3455A Range listed in Table 4-15. The 3455A display readings should be within the Test Limits given in the table.

h. Set the AC Calibrator for an output of 1 V, 10 khz. Set the 3455A FUNCTION to ACV and RANGE to 1 V.

i. Record the 3455A reading; _____V.

j. Set the 3455A FUNCTION to FAST ACV. Record the 3455A reading: _____ V.

k. Set the 3455A FUNCTION to ACV and RANGE to 10 V. Set the AC Calibrator for an output of 6 V, 10 kHz.

l .Record the 3455A reading: _____ V.

m. Set the 3455A FUNCTION to FAST ACV. Record the 3455A reading: _____ V.

n. Disconnect the AC Calibrator from the 3455A. Set the 3455A FUNCTION to ACV and RANGE to 1 V.

o. Set the Test Oscillator for an output of 1 V, 10 kHz. Connect the 50-ohm output of the Test Oscillator, terminated in a 50-ohm load, to the 3455A front panel INPUT.

p. Adjust the Test Oscillator level controls for a 3455A reading as close as possible to the reading recorded in Step i. Set the Test Oscillator's meter switch to expanded scale and adjust the meter reference controls for a zero reading on the Test Oscillator's meter. Use the Test Oscillator's level controls to maintain this zero reading whenever the Test Oscillator frequency is varied.

q. 1. Standard Model 3455A: Set the Test Oscillator to each of the first four Test Frequencies listed in Table 4-14 (maintain reference level on meter of Test Oscillator). At each frequency setting, the 3455A display reading should be within the Test Limits given in the table.

2. 3455A Option 001: Set the Test Oscillator frequency to 250 kHz (maintain reference level on meter of Test Oscillator). The 3455A display reading should be between 0.99240 V and 1.00760V (24-hour spec.) or between 0.99190 V and 1.00810 V (90-day spec.).

r. Set the 3455A FUNCTION to FAST ACV. Set the Test Oscillator frequency to 10 kHz and adjust its out-

Table 4-14. AC Accuracy Test 100 kHz to 1 MHz (Standard Model 3455A only).

Test Frequency	Input Level	3455A Range	24 Hour* Test Limits	90 Day* Test Limits
110 kHz	1 V	1 V	0.98000 to 1.02000	0.97750 to 1.02250
250 kHz	1 V	1 V	↓	↓
500 kHz	1 V	1 V	0.95600 to 1.04400	0.94500 to 1.05500
1 MHz	1 V	1 V	0.92400 to 1.07600	0.92000 to 1.08000
110 kHz	6 V	10 V	5.8720 to 6.1280	5.8550 to 6.1450
250 kHz	6 V	10 V	↓	↓
500 kHz	6 V	10 V	5.7200 to 6.2800	5.6500 to 6.3500
1 MHz	6 V	10 V	5.5500 to 6.4500	5.4400 to 6.5600

*These test limits do not include the temperature coefficients that must be added if the instrument is operated outside of the temperature range over which the 24-hour or 90-day specifications apply (see Table 1-1). Derive 6-month test limits from AC Accuracy specifications listed in Table 1-1.

put level for the 3455A reading recorded in Step j. Adjust meter reference controls for a zero reading on the meter of the Test Oscillator and use the level control to maintain this reading whenever the frequency is varied.

s. Repeat Step q.

t. Set the 3455A FUNCTION to ACV and RANGE to 10 V. Remove the 50-ohm termination from the Test Oscillator's output. Connect the 50-ohm output of the Test Oscillator (unterminated) to the 3455A front panel INPUT. Set the Test Oscillator frequency to 10 kHz and adjust its level controls for the 6 V 3455A reading recorded in Step l. Adjust the meter reference controls for a zero reading on the meter of the Test Oscillator and use the level controls to maintain this reading whenever the frequency is varied.

u. 1. Standard Model 3455A: Set the Test Oscillator to each of the second four Test Frequencies listed in Table 4-6 (maintain reference level on meter of Test Oscillator). At each frequency setting, the 3455A reading should be within the Test Limits given in the table.

Table 4-15. AC Accuracy Test 30 Hz to 100 kHz (3455A Option 001 only).

Frequency (ACV)	Frequency (FAST ACV)	Input Level	3455A Range	24 Hour* Test Limits	90 Day* Test Limits
30 Hz	300 Hz	1 V	1 V	0.99460 to 1.00540	0.99430 to 1.00570
50 Hz	500 Hz	1 V	1 V	0.99630 to 1.00370	0.99600 to 1.00400
100 Hz	1 kHz	1 V	1 V	0.99885 to 1.00115	0.99875 to 1.00125
10 kHz	10 kHz	1 V	1 V	↓	↓
50 kHz	50 kHz	1 V	1 V		
100 kHz	100 kHz	1 V	1 V		
30 Hz	300 Hz	5 V	10 V	4.9695 to 5.0305	4.9680 to 5.0320
50 Hz	500 Hz	5 V	10 V	4.9790 to 5.0210	4.9775 to 5.0225
100 Hz	1 kHz	5 V	10 V	4.9930 to 5.0070	4.9925 to 5.0075
10 kHz	10 kHz	5 V	10 V	↓	↓
50 kHz	50 kHz	5 V	10 V		
100 kHz	100 kHz	5 V	10 V		
30 Hz	300 Hz	10 V	10 V	9.9460 to 10.0540	9.9430 to 10.0570
50 Hz	500 Hz	10 V	10 V	9.9630 to 10.0370	9.9600 to 10.0400
100 Hz	1 kHz	10 V	10 V	9.9885 to 10.0115	9.9875 to 10.0125
10 kHz	10 kHz	10 V	10 V	↓	↓
20 kHz	20 kHz	10 V	10 V		
50 kHz	50 kHz	10 V	10 V		
100 kHz	100 kHz	10 V	10 V		
30 Hz	300 Hz	100 V	100 V	99.460 to 100.540	99.430 to 100.570
50 Hz	500 Hz	100 V	100 V	99.630 to 100.370	99.600 to 100.400
100 Hz	1 kHz	100 V	100 V	99.885 to 100.115	99.875 to 100.125
10 kHz	10 kHz	100 V	100 V	↓	↓
50 kHz	50 kHz	100 V	100 V		
100 kHz	100 kHz	100 V	100 V		
30 Hz	300 Hz	1000 V	1000 V	994.60 to 1005.40	994.30 to 1005.70
50 Hz	500 Hz	1000 V	1000 V	996.30 to 1003.70	996.00 to 1004.00
100 Hz	1 kHz	1000 V	1000 V	998.85 to 1001.15	998.75 to 1001.25
10 kHz	10 kHz	1000 V	1000 V	998.75 to 1001.25	998.65 to 1001.35

*These test limits do not include the temperature coefficients that must be added if the instrument is operated outside of the temperature range over which the 24-hour or 90-day specifications apply (see Table 1-1). Derive 6-month test limits from Accuracy Specifications listed in Table 1-1.

Table 4-16. Two-Wire Ohm Accuracy Test.

		(A) Test Limits (High Res. Off)		(B) Test Limits (High Res. On)	
Decade Resistor	3455A Range	24 Hour*	90 Day*	24 Hour*	90 Day*
100 Ω	0.1	0.099593 to 0.100407	0.099590 to 0.100410	———	———
1 kΩ	1	0.99956 to 1.00044	0.99954 to 1.00046	0.999571 to 1.000429	0.999560 to 1.000440
10 kΩ	10	9.9989 to 10.0011	9.9987 to 10.0013	9.99911 to 10.00089	9.99895 to 10.00105
100 kΩ	100	99.996 to 100.004	99.994 to 100.006	99.9971 to 100.0029	99.9955 to 100.0045
1 MΩ	1 K	999.83 to 1000.17	999.81 to 1000.19	999.876 to 1000.124	999.860 to 1000.140
10 MΩ	10 K	9989.5 to 10010.5	9989.5 to 10010.5	9989.96 to 10010.04	9989.95 to 10010.05

*These test limits do not include the temperature coefficients that must be added if the instrument is operated outside of the temperature range over which the 24-hour or 90-day specifications apply (see Table 1-1). Derive 6-month test limits from Ohms Accuracy specifications listed in Table 1-1.

2. 3455A Option 001. Set the Test Oscillator frequency to 250 kHz (maintain reference level on meter of Test Oscillator). The 3455A display reading should be between 5.9520 V and 6.0480 V (24-hour spec.) or between 5.9490 V and 6.0510 V (90-day spec.).

v. Set the 3455A FUNCTION to FAST ACV. Set the Test Oscillator frequency to 10 kHz and adjust its level controls for the 6 V 3455A reading recorded in Step m. Adjust the meter reference controls for a zero reading on the meter of the Test Oscillator and use the level controls to maintain this reading whenever the frequency is varied.

w. Repeat Step u.

x. This completes the AC Voltmeter Accuracy test. Disconnect the Test Oscillator from the 3455A.

4-48. Ohmmeter Accuracy Test.

4-49. This test requires a *calibrated* decade resistor with settings that range from 100 ohms to 10 megohms. The correction factors indicated on the decade resistor's calibration chart must be *algebraically* added to the 3455A display readings to achieve the required test accuracy.

4-50. Test Procedure.

Equipment Required:

Decade Resistor (calibrated General Radio Model 1433Z)
DC Voltmeter (-hp- Model 419A)

a. Set the 3455A controls as follows:

FUNCTION ..... 2 WIRE K OHM
RANGE 0.1
HIGH RESOLUTION ..... OFF
GUARD ..... ON

b. Using a shielded cable equipped with banana-plug connectors, connect the Decade Resistor to the INPUT of the 3455A. Set the Decade Resistor to 100 ohms.

c. Algebraically add the Decade Resistor's correction factor to the 3455A reading. The algebraic sum should be within the Test Limits given in Table 4-16(A), verifying the 3455A 2-wire ohms accuracy with High Resolution off.

d. Repeat Step c for each Decade Resistor setting and 3455A Range listed in Table 4-16.

e. Set the 3455A RANGE to 1 and HIGH RESOLUTION to ON. Set the Decade Resistor to 1,000 ohms.

f. Algebraically add the Decade Resistor's correction factor to the 3455A reading. The algebraic sum should be within the Test Limits given in Table 4-16(B), verify the 3455A 2-wire ohms accuracy with High Resolution on.

g. Repeat Step f for each additional Decade Resistor setting and 3455A Range listed in Table 4-16(A).

h. Set the 3455A controls as follows:

FUNCTION ..... 4 WIRE K OHM
RANGE 0.1
HIGH RESOLUTION ..... OFF

i. Set the Decade Resistor to 100 ohms. Connect a shielded cable, equipped with banana-plug connectors, between the 3455A OHM SIGNAL output and the input of the Decade Resistor. (Leave the other cable connected between the 3455A INPUT and the input of the Decade Resistor.)

j. Algebraically add the Decade Resistor's correction factor to the 3455A reading. The algebraic sum should be within the Test Limits given in Table 4-17(A), verifying the 3455A 4-wire ohms accuracy with High Reslution off.

k. Repeat Step j for each Decade Resistor setting and 3455A Range listed in Table 4-17(A).

Table 4-17. Four-Wire Ohms Accuracy Test.

		(A) Test Limits (High Res. Off)		(B) Test Limits (High Res. On)	
Decade Resistor	3455A Range	24 Hour*	90 Day*	24 Hour*	90 Day*
100 Ω	0.1	0.099993 to 0.100007	0.099990 to 0.100010	———	———
1 kΩ	1	0.99996 to 1.00004	0.99994 to 1.00006	0.999971 to 1.000029	0.999960 to 1.000040
10 kΩ	10	9.9993 to 10.0007	9.9991 to 10.0009	9.99951 to 10.00049	9.99935 to 10.00065
100 kΩ	100	99.996 to 100.004	99.994 to 100.006	99.9975 to 100.0025	99.9959 to 100.0041
1 MΩ	1 K	999.83 to 1000.17	999.81 to 1000.19	999.876 to 1000.124	999.860 to 1000.140
10 MΩ	10 K	9989.5 to 10010.5	9989.5 to 10010.5	9989.96 to 10010.04	9989.95 to 10010.05

*These test limits do not include the temperature coefficients that must be added if the instrument is operated outside of the temperature range over which the 24-hour or 90-day specifications apply (see Table 1-1). Derive 6-month test limits from Ohms Accuracy specifications listed in Table 1-1.

l. Set the 3455A RANGE to 1 and HIGH RESOLUTION to ON. Set the Decade Resistor to 1,000 ohms.

m. Algebraically add the Decade Resistor's correction factor to the 3455A reading. The algebraic sum should be within the Test Limits given in Table 4-17(B), verifying the 3455A 4-wire ohms accuracy with High Resolution on.

n. Repeat Step l for each additional Decade Resistor setting and 3455A Range listed in Table 4-17(B).

o. Set the 3455A RANGE to 10 K. Set the Decade Resistor to 14.99 K.

p. Using the DC Voltmeter, measure the voltage across the Decade Resistor terminals. The voltage should be less than 4.7 V dc, verifying the maximum output voltage specification for a valid ohms reading.

q. Disconnect the Decade Resistor. (Leave the 3455A OHMS SIGNAL output connected to the INPUT).

r. Measure the voltage across the 3455A INPUT terminals. The voltage should be less than 5 V dc, verifying the maximum output voltage specification for an open-circuit condition.

4-51. COMMON-MODE AND NORMAL-MODE REJECTION TEST.

4-52. Effective common-mode rejection is the ratio of the peak common-mode voltage to the resultant peak error in the reading, with a 1 kilohm imbalance in the Low input lead. The formula for calculating effective common-mode rejection (ECMR) is:

$$ECMR = 20 \log \frac{\text{Peak Common-Mode Voltage}}{\text{Effective on Reading (Volts)}}$$

4-53. Normal-mode rejection is the ratio of the peak ac normal-mode voltage to the peak error it introduces in a dc voltmeter reading. The formula for calculating normal-mode rejection (NMR) is:

$$NMR = 20 \log \frac{\text{Peak AC Superimposed Voltage}}{\text{Effect on Reading (Volts)}}$$

4-54. Test Procedure.

Equipment Required:

DC Standard (Systron Donner Model M106A)
AC Calibrator (-hp- Model 745A)
Frequency Counter (-hp- Model 5300A)
Resistor (1 kΩ ± 10% 1/4 W -hp- Part Number 0684-1021)
Resistor (10 kΩ ± 10% 1/4 W -hp- Part Number 0684-1031)

a. Connect the 1 K resistor between the 3455A High and Low INPUT terminals. Connect the GUARD terminal to the High INPUT terminal.

b. Set the 3455A controls as follows:

FUNCTION ..... DCV
RANGE ..... 1 V
HIGH RESOLUTION ..... ON
GUARD ..... OFF

c. Record the 3455A reading: _____ V.

d. Connect the DC Standard (output off) between the High INPUT terminal and the chassis of the 3455A as shown in Figure 4-6.

e. Set the DC Standard for an output of + 500 V dc.

f. The 3455A reading should be within 0.000050 V of the reading recorded in Step c, verifying that the dc common-mode rejection is greater than 140 dB.

g. This completes the dc common-mode Rejection test. Turn off the DC Standard output and disconnect the DC Standard from the 3455A. Disconnect the 1 K resistor and connect the 10 K resistor across the 3455A INPUT terminals (leave GUARD connected to High).

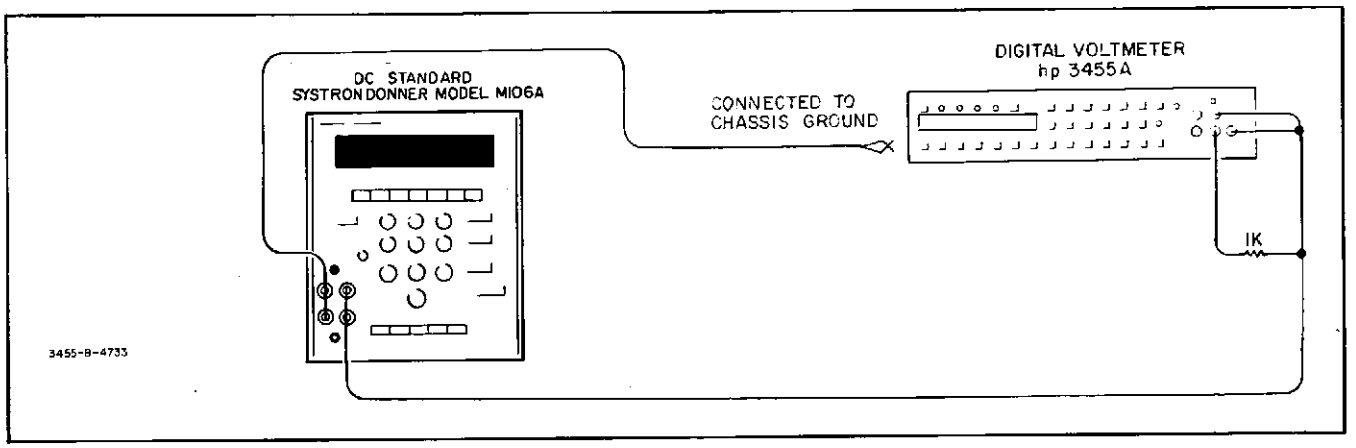

Figure 4-6. DC Common-Mode Rejection Test.

h. Set the AC Calibrator for an output of 1 V. Connect the Frequency Counter to the output of the AC Calibrator and adjust the AC Calibrator's frequency to 50 Hz or 60 Hz ± 0.1%, corresponding to the power-line frequency being used.

i. Record the 3455A reading: _____V.

j. Disconnect the Frequency Counter and connect the AC Calibrator between the High INPUT terminal and chassis of the 3455A as shown in Figure 4-7.

k. Without disturbing the frequency setting, set the AC Calibrator for an output of 70.7 V (100 V peak).

l. The 3455A reading should be within 0.000010 V of the reading recorded in Step i, verifying that the 50 Hz or 60 Hz ac common-mode rejection is greater than 160 dB.

m. Without disturbing the frequency setting set the AC Calibrator for an output of 7.07 V (10 V peak). Disconnect the AC Calibrator from the 3455A.

n. Remove the 10 K resistor from the 3455A INPUT terminals. Connect a short jumper between the 3455A High and Low INPUT terminals.

o. Set the 3455A RANGE to 10 V and record the display reading: _____V.

p. Remove the jumper from the 3455A INPUT terminals. Connect the AC Calibrator output to the 3455A INPUT.

q. The 3455A reading should be within 00.0100 V of the reading recorded in Step o, verifying that the 50 Hz or 60 Hz normal-mode rejection is greater than 60 dB.

r. This completes the Common-Mode and Normal-Mode Rejection Tests. Disconnect the AC Calibrator from the 3455A and disconnect the GUARD from the High INPUT terminal.

4-55. DC VOLTMETER INPUT RESISTANCE TEST.

Equipment Required:

DC Standard (Systron Donner Model M106A)
Resistor (1 MΩ ± 0.01% 1/4 W -hp- Part Number 0811-0202)

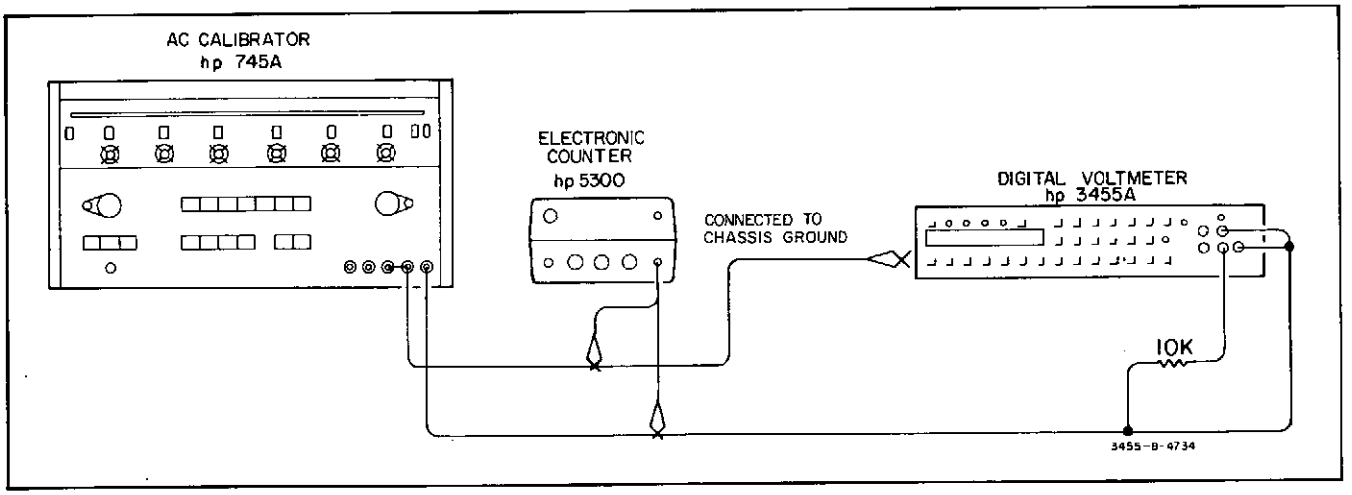

Figure 4-7. AC Common-Mode Rejection Test.

a. Connect the low output of the DC Standard to the Low INPUT terminal of the 3455A. Using short clip leads, insert the 1 megohm resistor in series between the DC Standard's high output and the High INPUT terminal of the 3455A. Connect a clip lead across the resistor.

b. Set the 3455A controls as follows:

FUNCTION ..... DCV
RANGE ..... 10 V
HIGH RESOLUTION ..... ON
GUARD ..... ON

c. Adjust the DC Standard for a 3455A reading of + 10.00000 V.

d. Remove the clip lead from across the 1 megohm resistor.

e. The 3455A reading should be between 9.99900 V and 10.00000 V, verifying that the input resistance is greater than 10^{10} ohms.

f. Set the 3455A RANGE to 100 V; Auto-Cal OFF. Reconnect the clip lead across the 1 megohm resistor.

g. Adjust the DC Standard for a 3455A reading of + 10.0000 V.

h. Remove the clip lead from across the 1 megohm resistor.

i. The 3455A reading should be between + 9.0900 V and + 9.0917 V, verifying that the input resistance is 10 megohms ± 0.1%.

4-56. AC VOLTMETER INPUT IMPEDANCE TEST.

Equipment Required:

Test Oscillator (-hp- Model 652A)
Resistor (1 MΩ ± 0.1% -hp- Part Number 0698-6369)
Resistor (100 kΩ 0.1% -hp- Part Number 0811-1997)

a. Set the 3455A controls as follows:

FUNCTION ..... ACV
RANGE ..... 1 V
GUARD ..... ON
INPUT SELECT (rear panel) .... FRONT
AUTO-CAL ..... ON

b. Connect the Test Oscillator 50-ohm output (terminated in 50-ohm load) to the 3455A front panel INPUT.

c. Set the Test Oscillator frequency to 50 Hz and adjust its output level for a 3455A reading of 1.00000 V.

d. Using short clip leads, insert the 1 megohm resistor in *series* between the terminated Test Oscillator output and the High INPUT terminal of the 3455A.

e. The 3455A reading should be between 0.66443 V and 0.66887 V, verifying that the input resistance is 2 megohms ± 1%.

f. Disconnect the resistor and reconnect the Test Oscillator output to the 3455A INPUT.

g. Set the Test Oscillator frequency to 20 kHz and adjust its output level for a 3455A reading of 1.00000 V.

h. Using short clip leads, insert the 100 kilohm resistor in series between the terminated Test Oscillator output and the High INPUT terminal of the 3455A.

i. The 3455A reading should be greater than 0.61017 V, verifying that the input shunt capacitance is less than 100 pF.

j. Set the rear panel INPUT SELECT switch to REAR. Connect the Test Oscillator 50-ohm output (terminated in 50-ohm load) to the 3455A rear-panel INPUT.

k. Repeat Steps c through i to test the input impedance at the rear INPUT terminals. In Step i, the 3455A reading should be greater than 0.70822 V verifying that the rear terminal input shunt capacitance is less than 75 pF.

OPERATIONAL VERIFICATION TEST CARD

Hewlett-Packard Model 3455A (Standard)

Digital Voltmeter

Serial No. _____

Tests Performed By: _____

Date _____

DC ACCURACY TEST

Input Level	3455A Range	High Resolution	3455A Positive Reading	3455A Negative Reading	Test Limits*
0.1 V	0.1 V	OFF			
1 V	1 V	ON			
1 V	10 V	ON			
5 V	10 V	ON			
10 V	10 V	ON			
10 V	10 V	OFF			
100 V	100 V	ON			
1000 V**	1000 V	ON			

*Record 24-hour or 90-day test limits from table designated in test procedure. Derive 6-month test limits from specifications listed in Table 1-1.

**For positive readings only. Do not apply negative voltages greater than −500 V dc.

AC VOLTMETER ACCURACY TEST 30 Hz TO 1 MHz
(Standard Model 3455A Only)

Test Frequency	Input Level	3455A Range	3455A Reading (ACV)	3455A Reading (FAST ACV)	Test Limits**
30 Hz*	1 V	1 V			
100 kHz	1 V	1 V			
350 kHz	5 V	10 V			
30 Hz*	5 V	10 V			
100 kHz	5 V	10 V			
1 MHz	1 V	1 V			
1 MHz	5 V	10 V			
30 Hz*	10 V	10 V			
20 kHz	10 V	10 V			
100 kHz	10 V	10 V			
30 Hz*	100 V	100 V			
100 kHz	100 V	100 V			
30 Hz*	1000 V	1000 V			
10 kHz	1000 V	1000 V			

*ACV Function Only

**Record 24-hour or 90-day test limits from the tables designated in the test procedure. Derive 6-month test limits from specifications listed in Table 1-1.

OPERATIONAL VERIFICATION TEST CARD (Cont'd).

OHMS ACCURACY TEST

Decade Resistor	3455A Range	Ohms Function	Reading	Test Limits*
100 Ω	0.1	4 Wire	_____	_____
1 kΩ	1	4 Wire	_____	_____
10 kΩ	10	4 Wire	_____	_____
100 kΩ	100	4 Wire	_____	_____
100 kΩ	100	2 Wire	_____	_____
1 MΩ	1 K	4 Wire	_____	_____
10 MΩ	10 K	4 Wire	_____	_____

*Record 24-hour or 90-day test limits from table designated in test procedure. Derive 6-month test limits from specifications listed in Table 1-1.

DC VOLTMETER INPUT RESISTANCE TEST

3455A Range	Test Reading	Test Limits
10 V	_____ V	9.99900 V to 10.00000 V
100 V	_____ V	9.0900 V to 9.0917 V

OPERATIONAL VERIFICATION TEST CARD

Hewlett-Packard Model 3455A (Option 001)

Digital Voltmeter

Serial No._____

Test Performed By:_____

Date _____

DC ACCURACY TEST

Input Level	3455A Range	High Resolution	3455A Positive Reading	3455A Negative Reading	Test Limits*
0.1 V	0.1 V	OFF			
1 V	1 V	ON			
1 V	10 V	ON			
5 V	10 V	ON			
10 V	10 V	ON			
10 V	10 V	OFF			
100 V	100 V	ON			
1000 V**	1000 V	ON			

*Record 24-hour or 90-day test limits from table designated in test procedure. Derive 6-month test limits from specifications listed in Table 1-1.

**For positive readings only. Do not apply negative voltages greater than −500 V dc.

AC VOLTMETER ACCURACY TEST (OPTION 001 ONLY)

Frequency (ACV)	Frequency (FAST ACV)	Input Level	3455A Range	3455A Reading (ACV)	3455A Reading (FAST ACV)	Test Limits*
30 Hz	300 Hz	1 V	1 V			
50 Hz	500 Hz	1 V	1 V			
250 kHz	250 kHz	1 V	1 V			
30 Hz	300 Hz	5 V	10 V			
100 Hz	100 kHz	5 V	10 V			
250 kHz	250 kHz	5 V	10 V			
30 Hz	300 Hz	10 V	10 V			
100 Hz	1 kHz	10 V	10 V			
100 kHz	100 kHz	10 V	10 V			
30 Hz	300 Hz	100 V	100 V			
100 kHz	100 kHz	100 V	100 V			
30 Hz	300 Hz	1000 V	1000 V			
10 kHz	10 kHz	1000 V	1000 V			

*Record 24-hour or 90-day test limits from tables designated in the test procedure. Derive 6-month test limits from specifications listed in Table 1-1.

OPERATIONAL VERIFICATION TEST CARD (Cont'd).

OHMS ACCURACY TEST

Decade Resistor	3455A Range	Ohms Function	Reading	Test Limits*
100 Ω	0.1	4 Wire	_____	_____
1 kΩ	1	4 Wire	_____	_____
10 kΩ	10	4 Wire	_____	_____
100 kΩ	100	4 Wire	_____	_____
100 kΩ	100	2 Wire	_____	_____
1 MΩ	1 K	4 Wire	_____	_____
10 MΩ	10 K	4 Wire	_____	_____

*Record 24-hour or 90-day test limits from table designated in test procedure. Derive 6-month test limits from specifications listed in Table 1-1.

DC VOLTMETER INPUT RESISTANCE TEST

3455A Range	Test Reading	Test Limits
10 V	_____ V	9.99900 V to 10.00000 V
100 V	_____ V	9.0900 V to 9.0917 V

PERFORMANCE TEST CARD

Hewlett-Packard Model 3455A (Standard Model Only)

Digital Voltmeter

Serial No._____

Tests Performed By:_____

Date_____

DC ACCURACY TEST (High Resolution off)

Input Level	3455A Range	3455A Positive Reading	3455A Negative Reading	Test Limits*
1 V	1 V			
10 V	10 V			
1000 V**	1000 V			
500 V	1000 V			
100 V	100 V			
0.1 V	0.1 V			

*Record 24-hour or 90-day test limits from table designated in test procedure. Derive 6-month test limits from specifications listed in Table 1-1.

**For positive readings only. Do not apply negative voltages greater than - 500 V dc.

DC ACCURACY TEST (High Resolution on)

Input Level	3455A Range	3455A Positive Reading	3455A Negative Reading	Test Limits*
1 V	1 V			
10 V	10 V			
1000 V**	1000 V			
500 V	1000 V			
100 V	1000 V			
100 V	100 V			
50 V	100 V			
10 V	100 V			
5 V	10 V			
1 V	10 V			
0.5 V	1 V			
0.1 V	1 V			

*Record 24-hour or 90-day test limits from table designated in test procedure. Derive 6-month test limits from specifications listed in Table 1-1.

**For positive readings only. Do not apply negative voltages greater than - 500 V dc.

PERFORMANCE TEST CARD (Cont'd)

AC VOLTMETER ACCURACY TEST 30 Hz TO 1 MHz
(Standard Model 3455A only)

Test Frequency	Input Level	3455A Range	3455A Reading (ACV)	3455A Reading (FAST ACV)	Test Limits**
30 Hz*	1 V	1 V			
300 Hz	1 V	1 V			
10 kHz	1 V	1 V			
20 kHz	1 V	1 V			
50 kHz	1 V	1 V			
100 kHz	1 V	1 V			
30 Hz*	5 V	10 V			
300 Hz	5 V	10 V			
20 kHz	5 V	10 V			
100 kHz	5 V	10 V			
30 Hz*	10 V	10 V			
50 Hz*	10 V	10 V			
100 Hz*	10 V	10 V			
500 Hz	10 V	10 V			
1 kHz	10 V	10 V			
5 kHz	10 V	10 V			
10 kHz	10 V	10 V			
20 kHz	10 V	10 V			
50 kHz	10 V	10 V			
100 kHz	10 V	10 V			
30 Hz*	100 V	100 V			
300 Hz	100 V	100 V			
10 kHz	100 V	100 V			
20 kHz	100 V	100 V			
100 kHz	100 V	100 V			
30 Hz*	1000 V	1000 V			
300 Hz	1000 V	1000 V			
10 kHz	1000 V	1000 V			
110 kHz	1 V	1 V			
250 kHz	1 V	1 V			
500 kHz	1 V	1 V			
1 MHz	1 V	1 V			
110 kHz	6 V	10 V			
250 kHz	6 V	10 V			
500 kHz	6 V	10 V			
1 MHz	6 V	10 V			

*ACV Function Only

**Record 24-hour or 90-day test limits from the tables designated in the test procedure. Derive 6-month test limits from specifications listed in Table 1-1.

TWO–WIRE OHMS ACCURACY TEST

Decade Resistor	3455A Range	High Res. Off Reading	High Res. Off Test Limits*	High Res. On Reading	High Res. On Test Limits*
100 Ω	0.1				
1 kΩ	1				
10 kΩ	10				
100 kΩ	100				
1 MΩ	1 K				
10 MΩ	10 K				

*Record 24-hour or 90-day test limits from table designated in test procedure. Derive 6-month test limits from specifications listed in Table 1-1.

FOUR–WIRE OHMS ACCURACY TEST

Decade Resistor	3455A Range	High Res. Off Reading	High Res. Off Test Limits*	High Res. On Reading	High Res. On Test Limits*
100 Ω	0.1				
1 kΩ	1				
10 kΩ	10				
100 kΩ	100				
1 MΩ	1 K				
10 MΩ	10 K				

*Record 24-hour or 90-day test limits from table designated in test procedure. Derive 6-month test limits from specifications listed in Table 1-1.

OHMS VOLTAGE TEST

Voltage for Valid Reading: _____ V (< 4.7 V dc)
Open-Circuit Voltage: _____ V (< 5 V dc)

COMMON-MODE AND NORMAL-MODE REJECTION TESTS

Reference Step	Reference Reading	Test	3455A Reading	Test Limit (Relative to Reference)
c.		DC-CMR		± 0.000050 V
i.		AC-CMR		± 0.000010 V
o.		NMR		± 0.0100 V

DC VOLTMETER INPUT RESISTANCE TEST

3455A Range	Test Reading	Test Limits
10 V	____V	9.99900 V to 10.00000 V
100 V	____V	9.0900 V to 9.0917 V

AC VOLTMETER INPUT IMPEDANCE TEST

Front-Terminal Reading (Step e): _____ V (0.66443 V to 0.66887 V)
Front-Terminal Reading (Step i): _____ V (>0.61017)
Rear-Terminal Reading (Step e): _____ V (0.66443 V to 0.66887 V)
Rear- Terminal Reading (Step k): _____ V (> 0.70822)

PERFORMANCE TEST CARD

Hewlett-Packard Model 3455A (Option 001 only)
Digital Voltmeter
Serial No._____

Tests Performed By:_____
Date_____

DC ACCURACY TEST (High Resolution off)

Input Level	3455A Range	3455A Positive Reading	3455A Negative Reading	Test Limits*
1 V	1 V			
10 V	10 V			
1000 V**	1000 V			
500 V	1000 V			
100 V	100 V			
0.1 V	0.1 V			

*Record 24-hour or 90-day test limits from table designated in test procedure. Derive 6-month test limits from specifications listed in Table 1-1.

**For positive readings only. Do not apply negative voltages greater than - 500 V dc.

DC ACCURACY TEST (High Resolution on)

Input Level	3455A Range	3455A Positive Reading	3455A Negative Reading	Test Limits*
1 V	1 V			
10 V	10 V			
1000 V**	1000 V			
500 V	1000 V			
100 V	1000 V			
100 V	100 V			
50 V	100 V			
10 V	100 V			
5 V	10 V			
1 V	10 V			
0.5 V	1 V			
0.1 V	1 V			

*Record 24-hour or 90-day test limits from table designated in test procedure. Derive 6-month test limits from specifications listed in Table 1-1.

**For positive readings only. Do not apply negative voltages greater than - 500 V dc.

PERFORMANCE TEST CARD (Cont'd)

TWO–WIRE OHMS ACCURACY TEST

Decade Resistor	3455A Range	High Res. Off		High Res. On	
		Reading	Test Limits*	Reading	Test Limits*
100 Ω	0.1				
1 kΩ	1				
10 kΩ	10				
100 kΩ	100				
1 MΩ	1 K				
10 MΩ	10 K				

*Record 24-hour or 90-day test limits from table designated in test procedure. Derive 6-month test limits from specifications listed in Table 1-1.

FOUR–WIRE OHMS ACCURACY TEST

Decade Resistor	3455A Range	High Res. Off		High Res. On	
		Reading	Test Limits*	Reading	Test Limits*
100 Ω	0.1				
1 kΩ	1				
10 kΩ	10				
100 kΩ	100				
1 MΩ	1 K				
10 MΩ	10 K				

*Record 24-hour or 90-day test limits from table designated in test procedure. Derive 6-month test limits from specifications listed in Table 1-1.

OHMS VOLTAGE TEST

Voltage for Valid Reading: _____ V (< 4.7 V dc)
Open-Circuit Voltage: _____ V (< 5 V dc)

COMMON-MODE AND NORMAL-MODE REJECTION TESTS

Reference Step	Reference Reading	Test	3455A Reading	Test Limit (Relative to Reference)
c.		DC-CMR		± 0.000050 V
i.		AC-CMR		± 0.000010 V
o.		NMR		± 0.0100 V

DC VOLTMETER INPUT RESISTANCE TEST

3455A Range	Test Reading	Test Limits
10 V	____V	9.99900 V to 10.00000 V
100 V	____V	9.0900 V to 9.0917 V

AC VOLTMETER INPUT IMPEDANCE TEST

Front-Terminal Reading (Step e): V (0.66443 V to 0.66887 V)
Front-Terminal Reading (Step i): V (> 0.61017)
Rear-Terminal Reading (Step e): V (0.66443 V to 0.66887 V)
Rear-Terminal Reading (Step k): V (> 0.70822)

PERFORMANCE TEST CARD (Cont'd)

AC VOLTMETER ACCURACY TEST (OPTION 001 ONLY)

Frequency (ACV)	Frequency (FAST ACV)	Input Level	3455A Range	3455A Reading (ACV)	3455A Reading (FAST ACV)	Test Limits*
30 Hz	300 Hz	1 V	1 V			
50 Hz	500 Hz	1 V	1 V			
100 Hz	1 kHz	1 V	1 V			
10 kHz	10 kHz	1 V	1 V			
50 kHz	50 kHz	1 V	1 V			
100 kHz	100 kHz	1 V	1 V			
30 Hz	300 Hz	5 V	10 V			
50 Hz	500 Hz	5 V	10 V			
100 Hz	1 kHz	5 V	10 V			
10 kHz	10 kHz	5 V	10 V			
50 kHz	50 kHz	5 V	10 V			
100 kHz	100 kHz	5 V	10 V			
30 Hz	300 Hz	10 V	10 V			
50 Hz	500 Hz	10 V	10 V			
100 Hz	1 kHz	10 V	10 V			
10 kHz	10 kHz	10 V	10 V			
20 kHz	20 kHz	10 V	10 V			
50 kHz	50 kHz	10 V	10 V			
100 kHz	100 kHz	10 V	10 V			
30 Hz	300 Hz	100 V	100 V			
50 Hz	500 Hz	100 V	100 V			
100 Hz	1 kHz	100 V	100 V			
10 kHz	10 kHz	100 V	100 V			
50 kHz	50 kHz	100 V	100 V			
100 kHz	100 kHz	100 V	100 V			
30 Hz	300 Hz	1000 V	1000 V			
50 Hz	500 Hz	1000 V	1000 V			
100 Hz	1 kHz	1000 V	1000 V			
10 kHz	10 kHz	1000 V	1000 V			
250 kHz	250 kHz	1 V	1 V			
250 kHz	250 kHz	6 V	10 V			

*Record 24-hour or 90-day test limits from tables designated in the test procedure. Derive 6-month test limits from specifications listed in Table 1-1.

WARNING

Maintenance described herein is performed with power supplied to the instrument, and protective covers removed. Such maintenance should be performed only by service-trained personnel who are aware of the hazards involved (for example, fire and electrical shock). Where maintenance can be performed without power applied, the power should be removed.

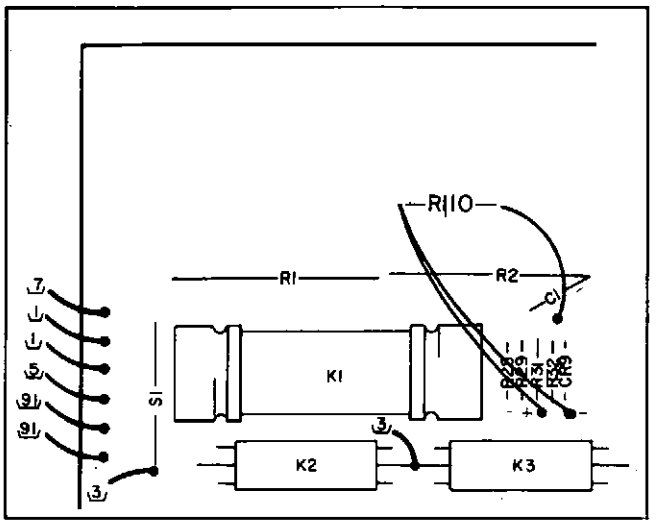

Figure 5-2. 1 Volt Zero Adjustment.

k. Remove the top covers and note the value of A10R106 – if there is an R110 installed (see Figure 5-2). Refer to Table 5-1 and record the Offset Voltage that corresponds to the current value of A10R110:____. (If there is no A10R110, record 0.000000 V.) If R110 is connected to the terminal marked "+", the polarity of the Offset Voltage is *negative*; if R110 is connected to the terminal marked "-", the polarity of the offset is *positive*.

l. Add the voltages recorded in Steps j and k to obtain the total offset:_____.

m. Refer to Table 5-1 and locate the Offset Voltage that is closest to the total offset voltage recorded in Step l. Obtain a resistor that corresponds to that offset voltage.

n. Remove the original A10R110 (Figure 5-2). If the total offset (Step l) is positive, connect the new R110 between the unmarked terminal and the terminal marked "-"; if the total offset is negative, connect it between the unmarked terminal and the terminal marked "+".

o. Reinstall the top covers and again allow the instrument to run at room temperature for 30 minutes. At the end of that period, the 3455A reading should be 0.000000 V ± 4 counts. If it is not, repeat Steps j through n.

Table 5-1. DC Zero Adjustment Padding List (A10R110).

Offset Voltage	Resistor Value*	-hp- Part No.
0.5 µV	3 M	0683-3055
1.0 µV	1.5 M	0683-1555
1.5 µV	1.0 M	0683-1055
2.0 µV	750 K	0683-7545
2.5 µV	620 K	0683-6245
3.0 µV	510 K	0683-5145
3.5 µV	430 K	0683-4345
4.0 µV	360 K	0683-3645
4.5 µV	330 K	0683-3345
5.0 µV	300 K	0683-3045

*All resistors are ± 5%, 1/4 W, carbon.

5-12. DC AND OHMS REFERENCE ADJUSTMENTS.

5-13. The DC Transfer Standard required for the following adjustments must be adjusted for optimum 1-volt and 10-volt output accuracy using NBS-calibrated voltage standards. The Transfer Standard should be adjusted just prior to use. After adjustment, it should be left on and, if possible, kept in a controlled environment where the ambient temperature is within one or two degrees of the temperature at which it was adjusted. The following procedure should be performed in that same environment.

5-14. Adjustment Procedure.

Equipment Required:

DC Transfer Standard (Fluke Model 731A)
Standard Resistor (1 kilohm ± 0.0005%; Guildline 9330/1 K)
Standard Resistor (100 kilohm ± 0.002%; Guildline 9330/100 K)

NOTE

All of the reference adjustments are screwdriver adjustments and are accessible through holes in the rear panel of the Reference Module (rear panel of instrument). Adjustment Designators are marked on the panel. The adjustments should be performed after a 30-minute warmup period with all covers installed.

a. Set the 3455A controls as follows:

FUNCTION . . . . . DCV
RANGE. . . . . 10 V
HIGH RESOLUTION. . . . . ON
AUTO CAL . . . . . ON
GUARD . . . . . ON
TRIGGER . . . . . INT
MATH. . . . . OFF

b. Set the DC Transfer Standard for an output of 10 V. Using short pieces of number 20 AWG (or larger) insulated solid copper wire, connect the output of the Transfer Standard to the 3455A INPUT.

c. Adjust the 10 V pot for a 3455A reading of + 10.00000 V.

d. Set the Transfer Standard for an output of 1 V. Set the 3455A RANGE to 1 V.

e. Adjust the 10:1 pot for a 3455A reading of 1.000000 V (± 1 count).

f. Set the 3455A RANGE to 10 V and set the Transfer Standard for an output of 10 V.

g. Repeat Steps c through f until optimum adjustment is obtained.

SECTION V
ADJUSTMENTS

5-1. INTRODUCTION.

5-2. This section contains complete adjustment procedures for the Model 3455A Digital Voltmeter. After the instrument is adjusted according to the procedures given in this section, it should meet the 24-hour accuracy specifications listed in Table 1-1.

5-3. EQUIPMENT REQUIRED.

5-4. The test equipment required for the adjustments is listed at the beginning of each adjustment procedure and in the Recommended Test Equipment table in Section I. If the recommended equipment is not available, use substitute equipment that meets the critical specifications given in the table.

5-5. ADJUSTMENT INTERVAL.

5-6. The 3455A adjustments should be performed at 90-day or 6-month intervals depending on the environmental conditions and your specific accuracy requirements. Adjustments should also be performed after the instrument has been repeaired.

5-7. ADJUSTMENT SEQUENCE.

5-8. The 3455A Adjustments must be performed in the sequence in which they are presented. If the dc and ohms accuracy of the instrument are satisfactory, the DC Zero Adjustments and Reference Adjustments can be omitted and the RMS or Average Converter adjustments can be performed to optimize the ac voltmeter accuracy.

5-9. TEST POINT AND ADJUSTMENT LOCATIONS.

5-10. Test points and adjustments are labeled on the top inner cover and rear panel (Reference Module) of the instrument or are shown in figures designated in the adjustment procedures.

5-11. DC ZERO ADJUSTMENTS.

Equipment Required:

DC Digital Voltmeter (-hp- Model 3490A or 3455A)

a. Remove the 3455A top outer cover and top inner cover to gain access to the A10 (Mother) board.

b. Set the 3455A controls as follows:

FUNCTION . . . . . DCV
RANGE. . . . . 10 V
HIGH RESOLUTION. . . . . ON
AUTO CAL . . . . . OFF
GUARD . . . . . ON
TRIGGER . . . . . INT
MATH. . . . . OFF

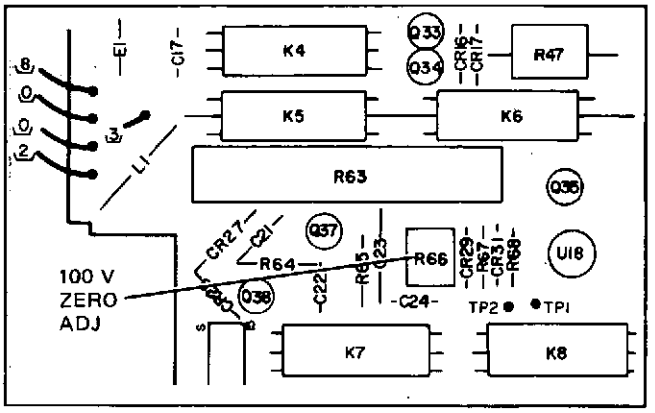

Figure 5-1. 100 Volt Zero Adjustment.

c. Set the test DVM to measure dc volts (autorange). Connect the DVM's low input to the A10 board ground test point and the high input to A10TO1 (Figure 5-1).

d. Adjust A10R66 (Figure 5-1) for a DVM reading of 0 V ± 50 microvolt. Disconnect the test DVM.

e. Set the 3455A RANGE to 100 V and AUTO CAL to ON. The 3455A Reading should be 0.0000 V ± 1 count. If it is not, repeat Steps b through d. If this does not correct the problem, refer to Section VIII for troubleshooting information.

f. Reinstall the top inner cover with two or three screws and reinstall the top outer cover (bottom covers must be installed).

g. Set the 3455A RANGE to 1 V. Connect a copper shorting strap across the 3455A INPUT terminals.

h. Allow the 3455A to run at room temperature for at least 30 minutes.

i. The 3455A reading should be 0.000000 V ± 4 counts. If it is, proceed to the DC Reference Adjustments (Paragraph 5-12). If it is not, it will be necessary to change the value of padding resistor A10R110 as outlined in the following steps.

j. Record the 3455A reading: _____ .

h. Disconnect the DC Transfer Standard. Set the 3455A FUNCTION to 4-WIRE K OHMS and RANGE to 1.

i. Using short pieces of number 20 AWG insulated solid copper wire, connect the 1 kilohm Standard Resistor to the 3455A INPUT and OHMS SIGNAL terminals in a 4-wire ohms measurement configuration.

j. Adjust the 1 kilohm pot for a 3455A reading of 1.000000 kilohm.

k. Disconnect the 1 kilohm Standard Resistor and connect the 100 K standard resistor using the same 4-wire ohm measurement configuration.

l. Set the 3455A RANGE to 100.

m. Adjust the 1 megohm pot for a 3455A reading of 100.0000 kilohm (± 1 count).

n. Set the 3455A RANGE to 1. Repeat Steps i through m to obtain optimum adjustment.

5-15. RMS CONVERTER ADJUSTMENTS (A15 Assy., Standard Model 3455A Only).

NOTE

For 3455A Option 001 instruments, refer to the Average Converter Adjustments (Paragraph 5-16).

Equipment Required:

AC/DC Digital Voltmeter (-hp- Model 3490A or 3455A)
DC Standard (Systron Donner Model 106A)
AC Calibrator (-hp- Model 745A)

a. Set the 3455A controls as follows:

FUNCTION	ACV
RANGE	10 V
AUTO CAL	ON
GUARD	ON
TRIGGER	INT
MATH	OFF
AC–AC/DC(Rear Panel)	AC

b. Connect a short across the 3455A INPUT terminals.

c. Set the Digital Voltmeter (DVM) to measure dc volts (auto range). Connect the DVM low input terminal to TP6 and the high input terminal to TP8.

d. Adjust R65 (PREAMP OFFSET ADJ) for a DVM reading of 0 V ± 10 microvolt.

e. Connect the DVM Low to TP6 and High to TP5. Adjust R56 (ABS AMP OFFSET ADJ) for a DVM reading of 0 V ± 10 microvolts.

f. Disconnect the DVM. Connect a clip lead between TP3 and TP6. Adjust R16 (INT AMP OFFSET) for a 3455A display reading of 0 V ± 1 count.

g. Remove the clip lead from TP3 and TP6. Adjust R29 (LOGGER AMP OFFSET) for a 3455A display reading between 0.0998 V and 0.1002 V with a 100 mV, 100 Hz signal applied to the input terminals.

h. Set the rear panel AC - AC/DC switch to AC/DC. Set the DC Standard for an output of 10 V dc. Connect the DC Standard output (Negative Polarity) to the 3455A INPUT.

i. Note the 3455A reading.

j. Reverse the polarity of the DC Standard's output and note the 3455A reading.

k. Adjust R51 (AC–DC TURNOVER ADJ) so that the readings in Steps i and j are equal ± 0.0005 V.

l. Disconnect the DC Standard from the 3455A INPUT. Set the rear panel AC–AC/DC switch to AC.

m. Set the 3455A RANGE to 1 V. Connect the DVM (AC function, autorange) Low to TP6 and High to TP8. Set the AC Calibrator for an output of 1 V, 100 Hz. Connect the AC Calibrator output to the 3455A INPUT.

n. Adjust R74 (1 V, 100 Hz ADJ) for a DVM reading of 1.00000 V ± 1 count. Disconnect the DVM.

o. Adjust R17 (GAIN) for a 3455A reading of 1.00000 V ± 5 counts.

NOTE

If, in the following steps, there is insufficient adjustment range for the 1 V, 10 V or 100 V high-frequency (40 kHz) adjustment, the adjustment range can be expanded by removing the appropriate jumper wire on the A15 board (see Table 5-2). Refer to the A15 board component locator (Section VIII) for jumper locations.

p. Set the AC Calibrator frequency to 40 kHz. Adjust R75 (1 V, 40 kHz ADJ) for a 3455A reading of 1.00010 V (tolerance = + 20 counts).

q. Set the 3455A RANGE to 10 V. Set the AC Calibrator for an output of 10 V, 100 Hz. Adjust R73 (10 V, 100 Hz ADJ) for a 3455A display reading of 10.0000 V ± 5 counts.

r. Set the AC Calibrator frequency to 40 kHz. Adjust R72 (10 V, 40 kHz ADJ) for a 3455A reading of 10.0010 V (tolerance = + 20 counts).

s. Set the 3455A RANGE to 100 V. Set the AC Calibrator for an output of 100 V, 100 Hz. Adjust R94 (100 V, 100 Hz ADJ) for a 3455A reading of 100.000 V ± 5 counts.

t. Set the AC Calibrator frequency to 40 kHz. Adjust C34 (100 V, 40 kHz ADJ) for a 3455A reading of 100.010 V (tolerance = + 20 counts).

u. Set the AC Calibrator for an output of 1 V, 100 Hz. Set the 3455A RANGE to 1 V. Repeat Steps o through u until optimum adjustment is obtained.

Table 5-2. Jumper Removal (A15 board).

Adjustment	Remove
1 V, 40 kHz	Jumper 2
10 V, 40 kHz	Jumper 3
100 V, 40 kHz	Jumper 1

5-16. AVERAGE CONVERTER ADJUSTMENTS (A13 Assy., 3455A Option 001 Only).

5-17. The following adjustments require an AC Calibrator such as the -hp- Model 745A. For optimum adjustment accuracy, the AC Calibrator should be calibrated at 1 V, 10 V and 100 V at 100 kHz. The AC Calibrator's error measurement control should then be used to adjust out the 100 kHz errors indicated on the calibration chart. For example, if the calibration chart indicates that the 745A output is 0.04% high at 1 V, 100 kHz, set the error measurement control to + 0.04% to obtain a precise 1 V output. The 745A can be calibrated during a routine performance test using the procedures outlined in the 745A Operating and Service Manual.

5-18. Adjustment Procedure.

Equipment Required:

AC Calibrator (-hp- Model 745A)

a. Set the 3455A controls as follows:

FUNCTION . . . . . ACV
RANGE. . . . . 1 V
AUTO CAL . . . . . ON
GUARD . . . . . ON
TRIGGER . . . . . INT
MATH. . . . . OFF

b. Set the AC Calibrator for an output of 10 mV, 1 kHz. Connect the AC Calibrator output to the 3455A INPUT.

c. Adjust R12 (DC OFFSET) for a 3455A reading of 0.01000 V ± 3 counts.

d. Set the AC Calibrator to 1 V, 100 kHz (use error measurement control). Adjust R13 (1 V HI FREQ) for a 3455A reading of 1.00000 V ± 5 counts.

e. Set the AC Calibrator frequency to 1 kHz (turn off error measurement control). Adjust R36 (1 V LOW FREQ) for a 3455A reading of 1.00000 V ± 5 counts.

f. Set the 3455A RANGE to 10 V. Set the AC Calibrator to 10 V, 1 kHz. Adjust R23 (10 V LOW FREQ) for a 3455A reading of 10.0000 V ± 5 counts.

NOTE

If, in the following steps, there is insufficient adjustment range for the 10 V or 100 V high-frequency (100 kHz) adjustment, the adjustment range can be expanded by removing the appropriate jumper wire on the A13 board (see Table 5-3). Refer to the A13 board component locator (Section VIII) for jumper locations.

g. Set the AC Calibrator frequency to 100 kHz. Adjust C15 (10 V HI FREQ) for a 3455A reading of 10.0000 V ± 10 counts.

h. Set the 3455A RANGE to 100 V. Set the AC Calibrator to 100 V, 1 kHz. Adjust R46 (100 V LOW FREQ) for a 3455A reading of 100.000 V ± 5 counts.

i. Set the AC Calibrator frequency to 100 kHz. Adjust C34 (100 V HI FREQ) for a 3455A reading of 100.000 V ± 10 counts.

j. Repeat Steps d through i until optimum adjustment is obtained.

Table 5-3. Jumper Removal (A13 board).

Adjustment	Remove
10 V, 100 kHz	Jumper 2
100 V, 100 kHz	Jumper 1

SECTION VI
REPLACEABLE PARTS

6-1. INTRODUCTION.

6-2. This section contains information for ordering replacement parts. Table 6-3 lists parts in alphameric order of their reference designators and indicates the description, -hp- Part Number of each part, together with any applicable notes, and provides the following:

a. Total quantity used in the instrument (Qty column). The total quantity of a part is given the first time the part number appears.

b. Description of the part. (See abbreviations listed in Table 6-1.)

c. Typical manufacturer of the part in a five-digit code. (See Table 6-2 for list of manufacturers.)

d. Manufacturers part number.

6-3. Miscellaneous parts are listed at the end of Table 6-3.

6-4. ORDERING INFORMATION.

6-5. To obtain replacement parts, address order or inquiry to your local Hewlett-Packard Field Office. (Field Office locations are listed at the back of the manual.) Identify parts by their Hewlett-Packard part numbers. Include instrument model and serial numbers.

6-6. NON-LISTED PARTS.

6-7. To obtain a part that is not listed, include:

a. Instrument model number.
b. Instrument serial number.
c. Description of the part.
d. Function and location of the part.

6-8. PARTS CHANGES.

6-9. Components which have been changed are so marked by one of three symbols; i.e., Δ, Δ with a letter subscript, e.g., Δ_a, or Δ with a number subscript, e.g., Δ_{10}. A Δ with no subscript indicates the component listed is the preferred replacement for an earlier component. A Δ with a letter subscript indicates a change which is explained in a note at the bottom of the page. A Δ with a number subscript indicates the related change is discussed in backdating (Section VII). The number of the subscript indicates the number of the change in backdating which should be referred to.

6-10. PROPRIETARY PARTS.

6-11. Items marked by a dagger (†) in the reference desig-

Table 6-1. Standard Abbreviations.

ABBREVIATIONS

Ag . . . silver	Hz . . . hertz (cycle(s) per second)	NPO . . . negative positive zero (zero temperature coefficient)	sl . . . slide
Al . . . aluminum	ID . . . inside diameter	ns . . . nanosecond(s) = 10^{-9} seconds	SPDT . . . single-pole double-throw
A . . . ampere(s)	impg . . . impregnated	nsr . . . not separately replaceable	SPST . . . single-pole single-throw
Au . . . gold	incd . . . incandescent		Ta . . . tantalum
C . . . capacitor	ins . . . insulation(ed)	Ω . . . ohm(s)	TC . . . temperature coefficient
cer . . . ceramic	kΩ . . . kilohm(s) = 10^{+3} ohms	obd . . . order by description	TiO_2 . . . titanium dioxide
coef . . . coefficient	kHz . . . kilohertz = 10^{+3} hertz	OD . . . outside diameter	tog . . . toggle
com . . . common		p . . . peak	tol . . . tolerance
comp . . . composition	L . . . inductor	pA . . . picoampere(s)	trim . . . trimmer
conn . . . connection	lin . . . linear taper	pc . . . printed circuit	TSTR . . . transistor
dep . . . deposited	log . . . logarithmic taper	pF . . . picofarad(s) 10^{-12} farads	V . . . volt(s)
DPDT . . . double-pole double-throw	mA . . . milliampere(s) = 10^{-3} amperes	piv . . . peak inverse voltage	vacw . . . alternating current working voltage
DPST . . . double-pole single-throw	MHZ . . . megahertz = 10^{+6} hertz	p/o . . . part of	var . . . variable
elect . . . electrolytic	MΩ . . . megohm(s) = 10^{+6} ohms	pos . . . position(s)	vdcw . . . direct current working voltage
encap . . . encapsulated	met flm . . . metal film	poly . . . polystyrene	W . . . watt(s)
F . . . farad(s)	mfr . . . manufacturer	pot . . . potentiometer	w/ . . . with
FET . . . field effect transistor	ms . . . millisecond	p-p . . . peak-to-peak	wiv . . . working inverse voltage
fxd . . . fixed	mtg . . . mounting	ppm . . . parts per million	w/o . . . without
GaAs . . . gallium arsenide	mV . . . millivolt(s) = 10^{-3} volts	prec . . . precision (temperature coefficient, long term stability and/or tolerance)	ww . . . wirewound
GHz . . . gigahertz = 10^{+9} hertz	μF . . . microfarad(s)		
gd . . . guard(ed)	μs . . . microsecond(s)	R . . . resistor	* . . . optimum value selected at factory, average value shown (part may be omitted)
Ge . . . germanium	μV . . . microvolt(s) = 10^{-6} volts	Rh . . . rhodium	** . . . no standard type number assigned selected or special type
gnd . . . ground(ed)	my . . . Mylar ®	rms . . . root-mean-square	
H . . . henry(ies)	nA . . . nanoampere(s) = 10_{-9} amperes	rot . . . rotary	® Dupont de Nemours
Hg . . . mercury	NC . . . normally closed	Se . . . selenium	
	Ne . . . neon	sect . . . section(s)	
	NO . . . normally open	Si . . . silicon	

DESIGNATORS

A . . . assembly	FL . . . filter	Q . . . transistor	TS . . . terminal strip
B . . . motor	HR . . . heater	QCR . . . transistor-diode	U . . . microcircuit
BT . . . battery	IC . . . integrated circuit	R(p) . . . resistor(pack)	V . . . vacuum tube, neon bulb, photocell, etc.
C . . . capacitor	J . . . jack	RT . . . thermistor	W . . . cable
CR . . . diode or thyristor	K . . . relay	S . . . switch	X . . . socket
DL . . . delay line	L . . . inductor	T . . . transformer	XDS . . . lampholder
DS . . . lamp	M . . . meter	TB . . . terminal board	XF . . . fuseholder
E . . . misc electronic part	MP . . . mechanical part	TC . . . thermocouple	Y . . . crystal
F . . . fuse	P . . . plug	TP . . . test point	Z . . . network

nator column are available only for repair and service of Hewlett-Packard Instruments.

6-12. EXCHANGE ASSEMBLIES.

6-13. Exchange assemblies are factory repaired and tested assemblies and are available only on a trade-in basis; therefore, the defective assembly must be returned for credit. For this reason, assemblies required for spare parts stock must be ordered by the new assembly part number listed in Table 6-3.

6-14. For service convenience, the Processor Assembly (A3) and Reference Assembly (A11) may be replaced on an exchange basis. Use the following part numbers and descriptions when ordering the exchange assemblies.

Processor Eschange Assembly (A3), -hp- part number 03455-69503.

Reference Exchange Assembly (A11), -hp- part number 11177-69501

6-15. SERVICE KIT.

6-16. A service kit is available to aid in the repair of the 3455A. This kit contains Processor and Reference Assemblies (A3 and A11) and selected components necessary for efficient repair. The Service Kit may be ordered through your nearest Hewlett-Packard Office. Order Service Kit Number 03455-69800.

Table 6-2. Code List of Manufacturers.

Manufacturer Number	Manufacturer Name	Address
FR002	EFCO Components	Saint-Malo France 35
GM077	Amp Deutschland	Germany
00000	U.S.A. Common	Any Supplier of the U.S.
0011J	Jermyn Industries	
0022U	United Chemicon Inc	
01121	Allen-Bradley Co	Milwaukee, WI 53212
01295	Texas Instr Inc Semicond Cmpnt Div	Dallas, TX 75231
02735	RCA Corp Solid State Div	Sommerville, NJ 08876
03888	KDI Pyrofilm Corp	Whippany, NJ 07981
04713	Motorola Semiconductor Products	Phoenix, AZ 85008
07263	Fairchild Semiconductor Div	Mountain View, CA 94040
11236	CTS of Berne Inc	Berne, IN 46711
11237	CTS Keene Inc	
11502	TRW Inc Boone Div	Boone, NC 28607
14140	Edison Elek Div McGraw-Edison	Manchester, NH 03130
15818	Teledyne Semiconductor	Mountain View, CA 94040
16365	Dayton Rogers Mfg Co	Minneapolis, MN 55407
17856	Seliconix Inc	Santa Clara, CA 95050
19701	Mepco/Electra Corp	Mineral Wells, TX 76067
24226	Gowanda Electronics Corp	Gowanda, NY 14070
24355	Analog Devices Inc	Norwood, MA 02062
24546	Corning Glass Works (Bradford)	Bradford, PA 16701
24931	Specialty Connector Co Inc	Indianapolis, IN 46227
27014	National Semiconductor Corp	Santa Clara, CA 95051
27264	Molex Products Co	Downers Grove, IL 60515
28480	Hewlett-Packard Co Corporate HQ	Palo Alto, CA 94304
32997	Bourns Inc Trimpot Prod Div	Riverside, CA 92507
34335	Advanced Micro Devices Inc	Sunnyvale, CA 94086
56289	Sprague Electric Co	North Adams, MA 01247
71785	TRW Elek Components Cinch Div	Elk Grove Village, IL 60007
72136	Electro Motive Corp Sub IEC	Willimantic, CT 06226
73138	Beckman Instruments Inc Helipot Div	Fullterton, CA 92634
74970	Johnson E F Co	Waseca, MN 56093
75915	Littelfuse Inc	Des Plaines, IL 60016
79727	C-W Industries	Warminster, PA 18974
8G464	Bergquist Co	Minneapolis, MN 55420
91637	Dale Electronics Inc	Columbus, NE 68601
91833	Keystone Electronics Corp	New York, NY 10012
99800	Amer Prcn Ind Inc Delevan Div	Aurora, NY 14052

Table 6-3. Replaceable Parts

Reference Designation	HP Part Number	Qty	Description	Mfr Code	Mfr Part Number
A1	03455-66501	1	P.C ASSEMBLY, OUTGO MB	28480	03455-66501
A1C1	0160-0362	3	CAPACITOR-FXD 510PF +-5% 300WVDC MICA	28480	0160-0362
A1C2	0180-0291	21	CAPACITOR-FXD 1UF+-10% 35VDC TA	56289	150D105X9035A2
A1C3	0180-0374	5	CAPACITOR-FXD 10UF+-10% 20VDC TA	56289	150D106X9020B2
A1C4	0180-0197	7	CAPACITOR-FXD 2.2UF+-10% 20VDC TA	56289	150D225X9020A2
A1C5	0180-1735	5	CAPACITOR-FXD .22UF+-10% 35VDC TA	56289	150D224X9035A2
A1C6	0180-0197		CAPACITOR-FXD 2.2UF+-10% 20VDC TA	56289	150D225X9020A2
A1C7	0180-1735		CAPACITOR-FXD .22UF+-10% 35VDC TA	56289	150D224X9035A2
A1C8	0180-0374		CAPACITOR-FXD 10UF+-10% 20VDC TA	56289	150D106X9020B2
A1C9	0180-0197		CAPACITOR-FXD 2.2UF+-10% 20VDC TA	56289	150D225X9020A2
A1C11	0160-1735		CAPACITOR-FXD .22UF+-10% 35VDC TA	56289	150D224X9035A2
A1C12	0180-0374		CAPACITOR-FXD 10UF+-10% 20VDC TA	56289	150D106X9020B2
A1C13	0160-0128	1	CAPACITOR-FXD 2.2UF +-20% 50WVDC CER	28480	0160-0128
A1C14	0180-0374		CAPACITOR-FXD 10UF+-10% 20VDC TA	56289	150D106X9020B2
A1C16	0180-0291		CAPACITOR-FXD 1UF+-10% 35VDC TA	56289	150D105X9035A2
A1C17	0180-0291		CAPACITOR-FXD 1UF+-10% 35VDC TA	56289	150D105X9035A2
A1C18	0180-0693	3	CAPACITOR-FXD 1000UF+50-10% 25VDC AL	00220	25V8SL1000
A1C19	0180-0228	1	CAPACITOR-FXD 22UF+-10% 15VDC TA	56289	150D226X9015B2
A1C21	0180-0291		CAPACITOR-FXD 1UF+-10% 35VDC TA	56289	150D105X9035A2
A1C22	0180-0694	1	CAPACITOR-FXD 7500UF+100-10% 12VDC AL	28480	0180-0694
A1C23	0180-0291		CAPACITOR-FXD 1UF+-10% 35VDC TA	56289	150D105X9035A2
A1C24	0180-0291		CAPACITOR-FXD 1UF+-10% 35VDC TA	56289	150D105X9035A2
A1C25	0180-0291		CAPACITOR-FXD 1UF+-10% 35VDC TA	56289	150D105X9035A2
A1C26	0140-0198	2	CAPACITOR-FXD 200PF +-5% 300WVDC MICA	72136	DM15F201J0300WV1CR
A1C27	0180-0291		CAPACITOR-FXD 1UF+-10% 35VDC TA	56289	150D105X9035A2
A1C28	0160-2204	5	CAPACITOR-FXD 100PF +-5% 300WVDC MICA	28480	0160-2204
A1C29	0180-1735		CAPACITOR-FXD .22UF+-10% 35VDC TA	56289	150D224X9035A2
A1C31	0180-0291		CAPACITOR-FXD 1UF+-10% 35VDC TA	56289	150D105X9035A2
A1C32 ΔA	0180-1735	1	CAPACITOR-FXD .22 UF+-10% 35 VDC TA	56289	150D224X9035A2
A1C33	0160-2605	4	CAPACITOR-FXD .02UF +80-20% 25WVDC CER	28480	0160-2605
A1C34	0160-0362		CAPACITOR-FXD 510PF +-5% 300WVDC MICA	28480	0160-0362
A1C35	0180-0291		CAPACITOR-FXD 1UF+-10% 35VDC TA	56289	150D105X9035A2
A1C36	0150-0093	2	CAPACITOR-FXD .01UF +80-20% 100WVDC CER	28480	0150-0093
A1C37	0160-0362		CAPACITOR-FXD 510PF +-5% 300WVDC MICA	28480	0160-0362
A1C38	0180-0291		CAPACITOR-FXD 1UF+-10% 35VDC TA	56289	150D105X9035A2
A1C39	0180-0291		CAPACITOR-FXD 1UF+-10% 35VDC TA	56289	150D105X9035A2
A1C41	0160-0195	1	CAPACITOR-FXD 1000PF +-20% 250WVAC CER	28480	0160-0195
A1C42	0180-0291		CAPACITOR-FXD 1UF +-10% 35VDC TA	56289	150D105X9035A2
A1C43 ΔB	0180-0291		CAPACITOR-FXD 1UF +-10% 35VDC TA	04200	150D105X9035A2
A1C44 ΔC	0180-1701		CAPACITOR-FXD 6.8UF +-20% 6VDC TA	04200	150D685X0006A2
A1CR1	1901-0200	4	DIODE-PWR RECT 100V 1.5A	04713	SR1846-9
A1CR2	1901-0200		DIODE-PWR RECT 100V 1.5A	04713	SR1846-9
A1CR3	1901-0050	45	DIODE-SWITCHING 80V 200MA 2NS DO-7	28480	1901-0050
A1CR5	1901-0050		DIODE-SWITCHING 80V 200MA 2NS DO-7	28480	1901-0050
A1CR6	1901-0050		DIODE-SWITCHING 80V 200MA 2NS DO-7	28480	1901-0050
A1CR7	1902-0631	3	DIODE-ZNR 1N5351B 14V 5% PD=5W TC=+75%	04713	1N5351B
A1CR8	1901-0028	12	DIODE-PWR RECT 400V 750MA DO-29	28480	1901-0028
A1CR9	1901-0028		DIODE-PWR RECT 400V 750MA DO-29	28480	1901-0028
A1CR11	1901-0050		DIODE-SWITCHING 80V 200MA 2NS DO-7	28480	1901-0050
A1CR12	1902-0049	5	DIODE-ZNR 6.19V 5% DO-7 PD=.4W TC=+.022%	28480	1902-0049
A1CR13	1902-0126	1	DIODE-ZNR 2.61V 5% DO-7 PD=.4W TC=-.073%	04713	SZ 10939-14
A1CR14	1902-0631		DIODE-ZNR 1N5351B 14V 5% PD=5W TC=+75%	04713	1N5351B
A1CR15	1901-0050		DIODE-SWITCHING 80V 200MA 2NS DO-7	28480	1901-0050
A1CR16	1902-3136	1	DIODE-ZNR 8.06V 5% DO-7 PD=.4W TC=+.052%	04713	SZ 10939-155
A1J1	1251-3195	1	CONNECTOR 4-PIN M POST TYPE	27264	09-60-1041(2403-04A)
A1J2	1251-4313	1	CONNECTOR 17-PIN M POST TYPE	27264	22-04-2181
A1J3	1251-3276	2	CONNECTOR 6-PIN M POST TYPE	27264	09-60-1061
A1J5	1251-3276		CONNECTOR 6-PIN M POST TYPE	27264	09-60-1061
A1J6	1251-2035	3	CONNECTOR-PC EDGE 15-CONT/ROW 2-ROWS	71785	252-15-30-300
A1J7	1251-4315	1	CONNECTOR 7-PIN M POST TYPE	27264	22-04-2081
A1J8	1251-4314	1	CONNECTOR 15-PIN M POST TYPE	27264	22-04-2161
A1L1	9140-0137	1	COIL-MLD 1MH 5% Q=60 .19DX.44LG SRF=3MHZ	99800	2500-28
A1Q1	1853-0010	5	TRANSISTOR PNP SI TO-18 PD=360MW	28480	1853-0010
A1Q2	1854-0210	3	TRANSISTOR NPN 2N2222 SI TO-18 PD=500MW	04713	2N2222
A1Q3	1854-0210		TRANSISTOR NPN 2N2222 SI TO-18 PD=500MW	04713	2N2222
A1Q4	1853-0010		TRANSISTOR PNP SI TO-18 PD=360MW	28480	1853-0010
A1Q5	1854-0210		TRANSISTOR NPN 2N2222 SI TO-18 PD=500MW	04713	2N2222
A1Q6	1853-0010		TRANSISTOR PNP SI TO-18 PD=360MW	28480	1853-0010
A1Q7	1853-0020	15	TRANSISTOR PNP SI PD=300MW FT=150MHZ	28480	1853-0020
A1Q8	1853-0020		TRANSISTOR PNP SI PD=300MW FT=150MHZ	28480	1853-0020
A1Q9	1853-0020		TRANSISTOR PNP SI PD=300MW FT=150MHZ	28480	1853-0020
A1Q11	1853-0409	8	TRANSISTOR PNP SI DARL TO-220AB PD=60W	28480	1853-0409
C46 ΔG	0160-3622		CAPACITOR-FXD .1UF +80 -20% 100VDC CER	28480	0160-3622

ΔA SEE NOTE ON SCHEMATIC 8.
ΔB SEE NOTE ON SCHEMATIC 10.
ΔC SEE NOTE ON SCHEMATIC 10.
ΔG SEE NOTE ON SCHEMATIC 10.

See introduction to this section for ordering information

Table 6-3. Replaceable Parts (Cont'd)

Reference Designation	HP Part Number	Qty	Description	Mfr Code	Mfr Part Number
A1Q12	1853-0409		TRANSISTOR PNP SI DARL TO-220AB PD=60W	28480	1853-0409
A1Q13	1853-0409		TRANSISTOR PNP SI DARL TO-220AB PD=60W	28480	1853-0409
A1Q14	1853-0409		TRANSISTOR PNP SI DARL TO-220AB PD=60W	28480	1853-0409
A1Q15	1853-0409		TRANSISTOR PNP SI DARL TO-220AB PD=60W	28480	1853-0409
A1Q16	1853-0409		TRANSISTOR PNP SI DARL TO-220AB PD=60W	28480	1853-0409
A1Q17	1853-0409		TRANSISTOR PNP SI DARL TO-220AB PD=60W	28480	1853-0409
A1Q18	1853-0409		TRANSISTOR PNP SI DARL TO-220AB PD=60W	28480	1853-0409
A1R1	0757-0230	4	RESISTOR 6.19K 1% .125W F TC=0+-100	19701	MF4C1/8-T0-6191-F
A1R2	0757-0273	6	RESISTOR 3.01K 1% .125W F TC=0+-100	24546	C4-1/8-T0-3011-F
A1R3	0757-0290		RESISTOR 6.19K 1% .125W F TC=0+-100	19701	MF4C1/8-T0-6191-F
A1R4	0757-0273		RESISTOR 3.01K 1% .125W F TC=0+-100	24546	C4-1/8-T0-3011-F
A1R5	0757-0283	11	RESISTOR 2K 1% .125W F TC=0+-100	24546	C4-1/8-T0-2001-F
A1R6	0757-0290		RESISTOR 6.19K 1% .125W F TC=0+-100	19701	MF4C1/8-T0-6191-F
A1R7	0757-0273		RESISTOR 3.01K 1% .125W F TC=0+-100	24546	C4-1/8-T0-3011-F
A1R8	0757-0290		RESISTOR 6.19K 1% .125W F TC=0+-100	19701	MF4C1/8-T0-6191-F
A1R9	0757-0273		RESISTOR 3.01K 1% .125W F TC=0+-100	24546	C4-1/8-T0-3011-F
A1R11	0757-0420	3	RESISTOR 750 1% .125W F TC=0+-100	24546	C4-1/8-T0-751-F
A1R12	0757-0801	1	RESISTOR 150 1% .5W F TC=0+-100	19701	MF7C-1/2-T0-151-F
A1R13	0698-4484	3	RESISTOR 19.1K 1% .125W F TC=0+-100	24546	C4-1/8-T0-1912-F
A1R14	0757-0349	3	RESISTOR 22.6K 1% .125W F TC=0+-100	24546	C4-1/8-T0-2262-F
A1R15	0757-0289	3	RESISTOR 13.3K 1% .125W F TC=0+-100	24546	C4-1/8-T0-1332-F
A1R16	0757-0419	3	RESISTOR 681 1% .125W F TC=0+-100	24546	C4-1/8-T0-681R-F
A1R17	0757-0465	8	RESISTOR 100K 1% .125W F TC=0+-100	24546	C4-1/8-T0-1003-F
A1R18	0757-0349		RESISTOR 22.6K 1% .125W F TC=0+-100	24546	C4-1/8-T0-2262-F
A1R19	0757-0289		RESISTOR 13.3K 1% .125W F TC=0+-100	24546	C4-1/8-T0-1332-F
A1R21	0757-0419		RESISTOR 681 1% .125W F TC=0+-100	24546	C4-1/8-T0-681R-F
A1R22	0757-0465		RESISTOR 100K 1% .125W F TC=0+-100	24546	C4-1/8-T0-1003-F
A1R23	0698-4484		RESISTOR 19.1K 1% .125W F TC=0+-100	24546	C4-1/8-T0-1912-F
A1R24	0757-0289		RESISTOR 13.3K 1% .125W F TC=0+-100	24546	C4-1/8-T0-1332-F
A1R25	0757-0419		RESISTOR 681 1% .125W F TC=0+-100	24546	C4-1/8-T0-681R-F
A1R26	0757-0465		RESISTOR 100K 1% .125W F TC=0+-100	24546	C4-1/8-T0-1003-F
A1R27	0698-4484		RESISTOR 19.1K 1% .125W F TC=0+-100	24546	C4-1/8-T0-1912-F
A1R28	0757-0349		RESISTOR 22.6K 1% .125W F TC=0+-100	24546	C4-1/8-T0-2262-F
A1R29	0757-0410	1	RESISTOR 301 1% .125W F TC=0+-100	24546	C4-1/8-T0-301R-F
A1R31	0757-0465		RESISTOR 100K 1% .125W F TC=0+-100	24546	C4-1/8-T0-1003-F
A1R32	0757-0283		RESISTOR 2K 1% .125W F TC=0+-100	24546	C4-1/8-T0-2001-F
A1R33 Δ1	0757-0442	1	RESISTOR 10K 1% .125W F TC=0+-100	24546	C4-1/8-T0-1002-F
A1R34	0757-0280		RESISTOR 1K 1% .125W F TC=0+-100	24546	C4-1/8-T0-1001-F
A1R35	0757-0442	8	RESISTOR 10K 1% .125W F TC=0+-100	24546	C4-1/8-T0-1002-F
A1R36	0757-0283		RESISTOR 2K 1% .125W F TC=0+-100	24546	C4-1/8-T0-2001-F
A1R37	0757-0283		RESISTOR 2K 1% .125W F TC=0+-100	24546	C4-1/8-T0-2001-F
A1R38	0757-0283		RESISTOR 2K 1% .125W F TC=0+-100	24546	C4-1/8-T0-2001-F
A1R39	0757-0283		RESISTOR 2K 1% .125W F TC=0+-100	24546	C4-1/8-T0-2001-F
A1R40	1810-0055	1	NETWORK-RES 9-PIN-SIP .15-PIN-SPCG	28480	1810-0055
A1R41	0757-0199	2	RESISTOR 21.5K 1% .125W F TC=0+-100	24546	C4-1/8-T0-2152-F
A1R42	0757-0199		RESISTOR 21.5K 1% .125W F TC=0+-100	24546	C4-1/8-T0-2152-F
A1R43	0757-0273		RESISTOR 3.01K 1% .125W F TC=0+-100	24546	C4-1/8-T0-3011-F
A1R44	0757-0442		RESISTOR 10K 1% .125W F TC=0+-100	24546	C4-1/8-T0-1002-F
A1R45	0698-4453	1	RESISTOR 402 1% .125W F TC=0+-100	24546	C4-1/8-T0-402R-F
A1R46	0757-0401		RESISTOR 100 1% .125W F TC=0+-100	24546	C4-1/8-T0-101-F
A1R47	0757-0368	1	RESISTOR 34 1% .125W F TC=0+-100	24546	C4-1/8-T0-34R0-F
A1R48	0757-0407	3	RESISTOR 200 1% .125W F TC=0+-100	24546	C4-1/8-T0-201-F
A1R49	0757-0407		RESISTOR 200 1% .125W F TC=0+-100	24546	C4-1/8-T0-201-F
A1R51	0757-0429	2	RESISTOR 1.82K 1% .125W F TC=0+-100	24546	C4-1/8-T0-1821-F
A1R52	0757-0280		RESISTOR 1K 1% .125W F TC=0+-100	24546	C4-1/8-T0-1001-F
A1R53	0757-0429		RESISTOR 1.82K 1% .125W F TC=0+-100	24546	C4-1/8-T0-1821-F
A1R54	0757-0407		RESISTOR 200 1% .125W F TC=0+-100	24546	C4-1/8-T0-201-F
A1R55	0698-4123	1	RESISTOR 499 1% .125W F TC=0+-100	24546	C4-1/8-T0-499R-F
A1R56	0757-0283		RESISTOR 2K 1% .125W F TC=0+-100	24546	C4-1/8-T0-2001-F
A1R57	0757-0283		RESISTOR 2K 1% .125W F TC=0+-100	24546	C4-1/8-T0-2001-F
A1R58	0757-0283		RESISTOR 2K 1% .125W F TC=0+-100	24546	C4-1/8-T0-2001-F
A1R59	0757-0280		RESISTOR 1K 1% .125W F TC=0+-100	24546	C4-1/8-T0-1001-F
A1R61	0757-0280		RESISTOR 1K 1% .125W F TC=0+-100	24546	C4-1/8-T0-1001-F
A1R62	0757-0280		RESISTOR 1K 1% .125W F TC=0+-100	24546	C4-1/8-T0-1001-F
A1R63	0757-0420	1	RESISTOR 750 1% .125W F TC=0+-100	24546	C4-1/8-T0-751-F
A1R64	0757-0280		RESISTOR 1K 1% .125W F TC=0+-100	24546	C4-1/8-T0-1001-F
A1R65	0757-0280		RESISTOR 1K 1% .125W F TC=0+-100	24546	C4-1/8-T0-1001-F
A1R66	0757-0280		RESISTOR 1K 1% .125W F TC=0+-100	24546	C4-1/8-T0-1001-F
A1R67	0757-0280		RESISTOR 1K 1% .125W F TC=0+-100	24546	C4-1/8-T0-1001-F
A1R68 ΔA	0757-0442		RESISTOR 10K 1% .125W	03292	C4-1/8-TO-1002-F
A1R69 ΔB	0757-0401		RESISTOR 100 1% .125W F TC=0+-100	03292	C4-1/8-TO-101-F
A1S1	3101-1973	1	SWITCH-SL 7-1A-NS DIP-SLIDE-ASSY .1A	11237	206 TYPE
A1U1	1820-1200	2	IC-DIGITAL SN74LS05N TTL LS HEX 1	01295	SN74LS05N
A1U2	1820-1197	7	IC-DIGITAL SN74LS00N TTL LS QUAD 2 NAND	01295	SN74LS00N
A1U3	1820-1053	1	IC-DIGITAL SN7414N TTL HEX 1	01295	SN7414N
A1U4	1820-1112	5	IC-DIGITAL SN74LS74N TTL LS DUAL	01295	SN74LS74N
A1U5	1820-1200		IC-DIGITAL SN74LS05N TTL LS HEX 1	01295	SN74LS05N

ΔA SEE NOTE ON SCHEMATIC 10.
ΔB SEE NOTE ON SCHEMATIC 10.
Δ1 SEE NOTE ON SCHEMATIC 10.

Table 6-3. Replaceable Parts (Cont'd)

Reference Designation	HP Part Number	Qty	Description	Mfr Code	Mfr Part Number
A1U6	1820-1558	3	IC-DIGITAL MC3441P TTL* QUAD	04713	MC3441P
A1U7	1820-1206	2	IC-DIGITAL SN74LS27N TTL LS TPL 3 NOR	01295	SN74LS27N
A1U8	1820-1199	8	IC-DIGITAL SN74LS04N TTL LS HEX 1	01295	SN74LS04N
A1U9	1820-1558		IC-DIGITAL MC3441P TTL* QUAD	04713	MC3441P
A1U10	1820-1199		IC-DIGITAL SN74LS04N TTL LS HEX 1	01295	SN74LS04N
A1U11	1820-1196	24	IC-DIGITAL SN74LS174N TTL LS HEX	01295	SN74LS174N
A1U12	1820-1558		IC-DIGITAL MC3441P TTL* QUAD	04713	MC3441P
A1U13	1820-1201	5	IC-DIGITAL SN74LS08N TTL LS QUAD 2 AND	01295	SN74LS08N
A1U14	1820-1197		IC-DIGITAL SN74LS00N TTL LS QUAD 2 NAND	01295	SN74LS00N
A1U15	1820-1198	9	IC-DIGITAL SN74LS03N TTL LS QUAD 2 NAND	01295	SN74LS03N
A1U16	1820-1198		IC-DIGITAL SN74LS03N TTL LS QUAD 2 NAND	01295	SN74LS03N
A1U17	1820-1198		IC-DIGITAL SN74LS03N TTL LS QUAD 2 NAND	01295	SN74LS03N
A1U18	1820-1198		IC-DIGITAL SN74LS03N TTL LS QUAD 2 NAND	01295	SN74LS03N
A1U19	1820-1196		IC-DIGITAL SN74LS174N TTL LS HEX	01295	SN74LS174N
A1U20	1820-1196		IC-DIGITAL SN74LS174N TTL LS HEX	01295	SN74LS174N
A1U21	1820-1568	6	IC-DIGITAL SN74LS125N TTL LS QUAD 1 BUS	01295	SN74LS125N
A1U22	1820-1568		IC-DIGITAL SN74LS125N TTL LS QUAD 1 BUS	01295	SN74LS125N
A1U23	1820-1196		IC-DIGITAL SN74LS174N TTL LS HEX	01295	SN74LS174N
A1U24	1820-1196		IC-DIGITAL SN74LS174N TTL LS HEX	01295	SN74LS174N
A1U25	1820-1196		IC-DIGITAL SN74LS174N TTL LS HEX	01295	SN74LS174N
A1U26	1820-1112		IC-DIGITAL SN74LS74N TTL LS DUAL	01295	SN74LS74N
A1U27	1906-0075	1	DIODE ARRAY	28480	1906-0075
A1U28	1820-1280	2	IC-DIGITAL SN74LS181N TTL LS	01295	SN74LS181N
A1U29	1820-1196		IC-DIGITAL SN74LS174N TTL LS HEX	01295	SN74LS174N
A1U30	1820-1280		IC-DIGITAL SN74LS181N TTL LS	01295	SN74LS181N
A1U31	1820-1196		IC-DIGITAL SN74LS174N TTL LS HEX	01295	SN74LS174N
A1U32	1820-1208	1	IC-DIGITAL SN74LS32N TTL LS QUAD 2 OR	01295	SN74LS32N
A1U33	1820-1216	2	IC-DIGITAL SN74LS138N TTL LS 3	01295	SN74LS138N
A1U34	1820-1568		IC-DIGITAL SN74LS125N TTL LS QUAD 1 BUS	01295	SN74LS125N
A1U35	1820-1568		IC-DIGITAL SN74LS125N TTL LS QUAD 1 BUS	01295	SN74LS125N
A1U36	1820-1432	2	IC-DIGITAL SN74LS163N TTL LS BIN	01295	SN74LS163N
A1U37	1820-1432		IC-DIGITAL SN74LS163N TTL LS BIN	01295	SN74LS163N
A1U38	1820-1201		IC-DIGITAL SN74LS08N TTL LS QUAD 2 AND	01295	SN74LS08N
A1U39	1820-1199		IC-DIGITAL SN74LS04N TTL LS HEX 1	01295	SN74LS04N
A1U40	1820-1112		IC-DIGITAL SN74LS74N TTL LS DUAL	01295	SN74LS74N
A1U41	1820-1216		IC-DIGITAL SN74LS138N TTL LS 3	01295	SN74LS138N
A1U42	1820-1568		IC-DIGITAL SN74LS125N TTL LS QUAD 1 BUS	01295	SN74LS125N
A1U43	1820-1568		IC-DIGITAL SN74LS125N TTL LS QUAD 1 BUS	01295	SN74LS125N
A1U44	1818-0199	2	IC AM9112APC 1K RAM NMOS	34335	AM9112APC
A1U45	1818-0199		IC AM9112APC 1K RAM NMOS	34335	AM9112APC
A1U46	1820-1198		IC-DIGITAL SN74LS03N TTL LS QUAD 2 NAND	01295	SN74LS03N
A1U47	1820-1201		IC-DIGITAL SN74LS08N TTL LS QUAD 2 AND	01295	SN74LS08N
A1U48	1820-1423	1	IC-DIGITAL SN74LS123N TTL LS DUAL	01295	SN74LS123N
A1U49	1820-1199		IC-DIGITAL SN74LS04N TTL LS HEX 1	01295	SN74LS04N
A1U50	1820-1197		IC-DIGITAL SN74LS00N TTL LS QUAD 2 NAND	01295	SN74LS00N
A1U51	1820-1196		IC-DIGITAL SN74LS174N TTL LS HEX	01295	SN74LS174N
A1U52	1820-1199		IC-DIGITAL SN74LS04N TTL LS HEX 1	01295	SN74LS04N
A1U53	1820-1206		IC-DIGITAL SN74LS27N TTL LS TPL 3 NOR	01295	SN74LS27N
A1U54	1820-1196		IC-DIGITAL SN74LS174N TTL LS HEX	01295	SN74LS174N
A1U55	1820-1197		IC-DIGITAL SN74LS00N TTL LS QUAD 2 NAND	01295	SN74LS00N
A1U56	1820-1245	2	IC-DIGITAL SN74LS155N TTL LS DUAL 2	01295	SN74LS155N
A1U57 ΔA	1820-0887	1	IC ENCDR TTL L 8-INP	02237	93L18PC
A1U58	1820-1196		IC-DIGITAL SN74LS174N TTL LS HEX	01295	SN74LS174N
A1U59	1820-1198		IC-DIGITAL SN74LS03N TTL LS QUAD 2 NAND	01295	SN74LS03N
A1U60	1820-1198		IC-DIGITAL SN74LS03N TTL LS QUAD 2 NAND	01295	SN74LS03N
A1U61	1820-1197		IC-DIGITAL SN74LS00N TTL LS QUAD 2 NAND	01295	SN74LS00N
A1U62	1820-1604	1	IC-DIGITAL SN74LS48N TTL LS 4	01295	SN74LS48N
A1U63	1820-1196		IC-DIGITAL SN74LS174N TTL LS HEX	01295	SN74LS174N
A1U64	1820-1245		IC-DIGITAL SN74LS155N TTL LS DUAL 2	01295	SN74LS155N
A1U65	1820-1196		IC-DIGITAL SN74LS174N TTL LS HEX	01295	SN74LS174N
A1U66	1820-1196		IC-DIGITAL SN74LS174N TTL LS HEX	01295	SN74LS174N
A1U67	1820-1196		IC-DIGITAL SN74LS174N TTL LS HEX	01295	SN74LS174N
A1U68	1820-1196		IC-DIGITAL SN74LS174N TTL LS HEX	01295	SN74LS174N
A1U69	1820-1196		IC-DIGITAL SN74LS174N TTL LS HEX	01295	SN74LS174N
A1U70	1820-1196		IC-DIGITAL SN74LS174N TTL LS HEX	01295	SN74LS174N
A1U71	1820-1740	1	IC-DIGITAL DS8863N MOS* DSPL DRVR	27014	DS8863N
A1Y1	0410-1001	1	CRYSTAL, QUARTZ 1.3 MHZ	28480	0410-1001
	1200-0485	1	SOCKET:IC 14-PIN PC MOUNTING	28480	1200-0485
	1200-0473	2	SOCKET-IC 16-CONT DIP-SLDR	28480	1200-0473
	0360-0686	2	*BUS BAR-M823	00000	OBD
	0360-0687	5	*BUS BAR-M823	00000	OBD
	5040-0170	2	GUIDE:PLUG-IN PC BOARD	28480	5040-0170

ΔA SEE NOTE ON SCHEMATIC 10.

Table 6-3. Replaceable Parts (Cont'd)

Reference Designation	HP Part Number	Qty	Description	Mfr Code	Mfr Part Number
A2	03455-66502	1	PC ASSEMBLY, DISPLAY	28480	03455-66502
A2CR1	1990-0547	36	LED-VISIBLE LUM-INT=2MCD IF=20MA-MAX	28480	1990-0547
A2CR2	1990-0547		LED-VISIBLE LUM-INT=2MCD IF=20MA-MAX	28480	1990-0547
A2CR3	1990-0547		LED-VISIBLE LUM-INT=2MCD IF=20MA-MAX	28480	1990-0547
A2CR4	1990-0547		LED-VISIBLE LUM-INT=2MCD IF=20MA-MAX	28480	1990-0547
A2CR5	1990-0547		LED-VISIBLE LUM-INT=2MCD IF=20MA-MAX	28480	1990-0547
A2CR6	1990-0547		LED-VISIBLE LUM-INT=2MCD IF=20MA-MAX	28480	1990-0547
A2CR7	1990-0547		LED-VISIBLE LUM-INT=2MCD IF=20MA-MAX	28480	1990-0547
A2CR8	1990-0547		LED-VISIBLE LUM-INT=2MCD IF=20MA-MAX	28480	1990-0547
A2CR9	1990-0547		LED-VISIBLE LUM-INT=2MCD IF=20MA-MAX	28480	1990-0547
A2CR10	1990-0547		LED-VISIBLE LUM-INT=2MCD IF=20MA-MAX	28480	1990-0547
A2CR11	1990-0547		LED-VISIBLE LUM-INT=2MCD IF=20MA-MAX	28480	1990-0547
A2CR12	1990-0547		LED-VISIBLE LUM-INT=2MCD IF=20MA-MAX	28480	1990-0547
A2CR13	1990-0547		LED-VISIBLE LUM-INT=2MCD IF=20MA-MAX	28480	1990-0547
A2CR14	1990-0547		LED-VISIBLE LUM-INT=2MCD IF=20MA-MAX	28480	1990-0547
A2CR15	1990-0547		LED-VISIBLE LUM-INT=2MCD IF=20MA-MAX	28480	1990-0547
A2CR16	1990-0547		LED-VISIBLE LUM-INT=2MCD IF=20MA-MAX	28480	1990-0547
A2CR17	1990-0547		LED-VISIBLE LUM-INT=2MCD IF=20MA-MAX	28480	1990-0547
A2CR18	1990-0547		LED-VISIBLE LUM-INT=2MCD IF=20MA-MAX	28480	1990-0547
A2CR19	1990-0547		LED-VISIBLE LUM-INT=2MCD IF=20MA-MAX	28480	1990-0547
A2CR20	1990-0547		LED-VISIBLE LUM-INT=2MCD IF=20MA-MAX	28480	1990-0547
A2CR21	1990-0547		LED-VISIBLE LUM-INT=2MCD IF=20MA-MAX	28480	1990-0547
A2CR22	1990-0547		LED-VISIBLE LUM-INT=2MCD IF=20MA-MAX	28480	1990-0547
A2CR23	1990-0547		LED-VISIBLE LUM-INT=2MCD IF=20MA-MAX	28480	1990-0547
A2CR24	1990-0547		LED-VISIBLE LUM-INT=2MCD IF=20MA-MAX	28480	1990-0547
A2CR25	1990-0547		LED-VISIBLE LUM-INT=2MCD IF=20MA-MAX	28480	1990-0547
A2CR26	1990-0547		LED-VISIBLE LUM-INT=2MCD IF=20MA-MAX	28480	1990-0547
A2CR27	1990-0547		LED-VISIBLE LUM-INT=2MCD IF=20MA-MAX	28480	1990-0547
A2CR28	1990-0547		LED-VISIBLE LUM-INT=2MCD IF=20MA-MAX	28480	1990-0547
A2CR29	1990-0547		LED-VISIBLE LUM-INT=2MCD IF=20MA-MAX	28480	1990-0547
A2CR30	1990-0547		LED-VISIBLE LUM-INT=2MCD IF=20MA-MAX	28480	1990-0547
A2CR31	1990-0547		LED-VISIBLE LUM-INT=2MCD IF=20MA-MAX	28480	1990-0547
A2CR32	1990-0547		LED-VISIBLE LUM-INT=2MCD IF=20MA-MAX	28480	1990-0547
A2CR33	1990-0547		LED-VISIBLE LUM-INT=2MCD IF=20MA-MAX	28480	1990-0547
A2CR34	1990-0547		LED-VISIBLE LUM-INT=2MCD IF=20MA-MAX	28480	1990-0547
A2CR35	1990-0547		LED-VISIBLE LUM-INT=2MCD IF=20MA-MAX	28480	1990-0547
A2DSM1	1990-0539	1	DISPLAY-NUM SEG .5-CHAR .408-H	28480	1990-0539
A2DSM2	1990-0540	7	DISPLAY-NUM SEG 1-CHAR .43-H	28480	1990-0540
A2DSM3	1990-0540		DISPLAY-NUM SEG 1-CHAR .43-H	28480	1990-0540
A2DSM4	1990-0540		DISPLAY-NUM SEG 1-CHAR .43-H	28480	1990-0540
A2DSM5	1990-0540		DISPLAY-NUM SEG 1-CHAR .43-H	28480	1990-0540
A2DSM6-DSM8	1990-0540		DISPLAY-NUM SEG 1-CHAR .43-H	28480	1990-0540
A2P1			NO PART NUMBER; SEE A2W1		
A2P2	1251-4340	1	CONNECTOR 16-PIN F POST TYPE	27264	22-01-2161
	1251-3476		CONTACT-CONN U/W POST TYPE FEM CRP (P/O P2)	28480	1251-3476
A2R1	0683-2015	4	RESISTOR 200 5% .25W FC TC=-400/+600	01121	CB2015
A2R2	0683-2215	3	RESISTOR 220 5% .25W FC TC=-400/+600	01121	CB2215
A2R3	0683-2215		RESISTOR 220 5% .25W FC TC=-400/+600	01121	CB2215
A2R4	0683-3305	8	RESISTOR 33 5% .25W FC TC=-400/+500	01121	CB3305
A2R5	0683-3305		RESISTOR 33 5% .25W FC TC=-400/+500	01121	CB3305
A2R6	0683-3305		RESISTOR 33 5% .25W FC TC=-400/+500	01121	CB3305
A2R7	0683-3305		RESISTOR 33 5% .25W FC TC=-400/+500	01121	CB3305
A2R8	0683-3305		RESISTOR 33 5% .25W FC TC=-400/+500	01121	CB3305
A2R9	0683-3305		RESISTOR 33 5% .25W FC TC=-400/+500	01121	CB3305
A2R10	0683-3305		RESISTOR 33 5% .25W FC TC=-400/+500	01121	CB3305
A2R11	0683-3305		RESISTOR 33 5% .25W FC TC=-400/+500	01121	CB3305
A2R12	1810-0229	5	NETWORK-RES 8-PIN-SIP .1-PIN-SPCG	11236	750-81-R330
A2R13	1810-0229		NETWORK-RES 8-PIN-SIP .1-PIN-SPCG	11236	750-81-R330
A2R14	1810-0229		NETWORK-RES 8-PIN-SIP .1-PIN-SPCG	11236	750-81-R330
A2R15	1810-0229		NETWORK-RES 8-PIN-SIP .1-PIN-SPCG	11236	750-81-R330
A2R16	1810-0229		NETWORK-RES 8-PIN-SIP .1-PIN-SPCG	11236	750-81-R330
A2R17 Δ_A	1810-0206	2	NETWORK-RES 8-PIN-SIP .1-PIN-SPCG	02483	750-81-R10K
A2R18 Δ_A	1810-0206		NETWORK-RES 8-PIN-SIP .1-PIN-SPCG	02483	750-81-R10K
A2S1-S28	5060-9436	28	PUSHBUTTON SWITCH	28480	5060-9436
A2W1	8120-2254	1	*CABLE ASSEMBLY, DISPLAY(INCLUDES P1)	28480	8120-2254
A2W2	03455-61601	1	CABLE ASSEMBLY, KEYBOARD(INCLUDES P2)	28480	03455-61601
	1200-0508	8	SOCKET-IC 14-CONT DIP-SLDR	28480	1200-0508

Δ_A SEE NOTE ON SCHEMATIC 10.

Table 6-3. Replaceable Parts (Cont'd)

Reference Designation	HP Part Number	Qty	Description	Mfr Code	Mfr Part Number
A3	03455-66503	1	P.C. ASSEMBLY, PROCESSOR	28480	03455-66503
	03455-69503		REBUILT EXCHANGE ASSEMBLY	28480	03455-69503
A3C1	0180-0210	3	CAPACITOR-FXD 3.3UF+-20% 15VDC TA	56289	150D335X0015A2
A3C2	0180-0210		CAPACITOR-FXD 3.3UF+-20% 15VDC TA	56289	150D335X0015A2
A3C3	0180-0210		CAPACITOR-FXD 3.3UF+-20% 15VDC TA	56289	150D335X0015A2
A3R1, R2	0757-0283		RESISTOR 2K 1% .125W F TC=0+-100	24546	C4-1/8-TO-2001-F
A3R3 ΔH			PADDING LIST		
	0698-3155	3	RESISTOR 4.64K 1% .125W F TC=0+-100(5.0V)	24546	C4-1/8-TO-4641-F
A3U1	1820-1201		IC-DIGITAL SN74LS08N TTL LS QUAD 2 AND	01295	SN74LS08N
A3U2	1820-1201		IC-DIGITAL SN74LS08N TTL LS QUAD 2 AND	01295	SN74LS08N
A3U3	1820-1198		IC-DIGITAL SN74LS03N TTL LS QUAD 2 NAND	01295	SN74LS03N
A3U4	1820-1199		IC-DIGITAL SN74LS04N TTL LS HEX 1	01295	SN74LS04N
A3U5	1820-1195	1	IC-DIGITAL SN74LS175N TTL LS QUAD	01295	SN74LS175N
A3U6	1818-0266	1	*IC, ROM-MOS	28480	1818-0266
A3U7	1818-0265	1	*IC, ROM-MOS	28480	1818-0265
A3U8	1818-0264	1	*IC, ROM-MOS	28480	1818-0264
A3U9	1820-1691	2	IC-DIGITAL MOS	28480	1820-1696
	4040-0748	6	EXTRACTOR-PC 8D BLK POLYC .062-8D-THKNS	28480	4040-0748
A10	03455-66510	1	P.C. ASSEMBLY, INGD M8	28480	03455-66510
A10C1	0160-4479	1	CAPACITOR-FXD 220PF +-10%	28480	0160-4479
A10C2	0160-2257	4	CAPACITOR-FXD 10PF +-5% 500WVDC CER	28480	0160-2257
A10C3	0160-3466	4	CAPACITOR-FXD 100PF +-10% 1000WVDC CER	28480	0160-3466
A10C4 ΔC	0160-0159	2	CAPACITOR-FXD 6800PF +-10% 200 VDC POLYE	28480	0160-0159
A10C5	0160-0134	1	CAPACITOR-FXD 220PF +-5% 300WVDC MICA	28480	0160-0134
A10C6	0150-0071	2	CAPACITOR-FXD 400PF +-5% 1000WVDC CER	28480	0150-0071
A10C7	0150-0071		CAPACITOR-FXD 400PF +-5% 1000WVDC CER	28480	0150-0071
A10C8	0180-0230	13	CAPACITOR-FXD 1UF+-20% 50VDC TA	56289	150D105X0050A2
A10C9	0180-0230		CAPACITOR-FXD 1UF+-20% 50VDC TA	56289	150D105X0050A2
A10C11	0180-0229	3	CAPACITOR-FXD 33UF+-10% 10VDC TA	56289	150D336X9010B2
A10C12	0160-0127	2	CAPACITOR-FXD 1UF +-20% 25WVDC CER	28480	0160-0127
A10C13	0160-3466		CAPACITOR-FXD 100PF +-10% 1000WVDC CER	28480	0160-3466
A10C14	0160-3466		CAPACITOR-FXD 100PF +-10% 1000WVDC CER	28480	0160-3466
A10C15	0160-2306	2	CAPACITOR-FXD 27PF +-5% 300WVDC MICA	28480	0160-2306
A10C16	0140-0204	1	CAPACITOR-FXD 47PF +-5% 500WVDC MICA	72136	DM15E470J050DWV1CR
A10C17	0160-2204		CAPACITOR-FXD 100PF +-5% 300WVDC MICA	28480	0160-2204
A10C18	0180-0230		CAPACITOR-FXD 1UF+-20% 50VDC TA	56289	150D105X0050A2
A10C19	0180-0230		CAPACITOR-FXD 1UF+-20% 50VDC TA	56289	150D105X0050A2
A10C21	0160-4461	1	CAPACITOR-FXD 150PF +-2.5% 160WVDC POLYP	28480	0160-4461
A10C22	0160-2257		CAPACITOR-FXD 10PF +-5% 500WVDC CER	28480	0160-2257
A10C23	0160-0154		CAPACITOR-FXD 2200PF +-10% 200WVDC POLYE	56289	292P22292
A10C24	0160-2306		CAPACITOR-FXD 27PF +-5% 300WVDC MICA	28480	0160-2306
A10C25	0180-0195	1	CAPACITOR-FXD .33UF+-20% 35VDC TA	56289	150D334X0035A2
A10C26	0160-3847	3	CAPACITOR-FXD .01UF +100-0% 50WVDC CER	28480	0160-3847
A10C27	0160-3847		CAPACITOR-FXD .01UF +100-0% 50WVDC CER	28480	0160-3847
A10C28	0180-0374		CAPACITOR-FXD 10UF+-10% 20VDC TA	56289	150D106X9020B2
A10C29	0160-2055	15	CAPACITOR-FXD .01UF +80-20% 100WVDC CER	28480	0160-2055
A10C31	0160-2055		CAPACITOR-FXD .01UF +80-20% 100WVDC CER	28480	0160-2055
A10C32	0180-0230		CAPACITOR-FXD 1UF+-20% 50VDC TA	56289	150D105X0050A2
A10C33	0160-3847		CAPACITOR-FXD .01UF +100-0% 50WVDC CER	28480	0160-3847
A10C34	0180-0230		CAPACITOR-FXD 1UF+-20% 50VDC TA	56289	150D105X0050A2
A10C35	0160-2055		CAPACITOR-FXD .01UF +80-20% 100WVDC CER	28480	0160-2055
A10C36	0160-2055		CAPACITOR-FXD .01UF +80-20% 100WVDC CER	28480	0160-2055
A10C37	0160-2055		CAPACITOR-FXD .01UF +80-20% 100WVDC CER	28480	0160-2055
A10C38	0160-2055		CAPACITOR-FXD .01UF +80-20% 100WVDC CER	28480	0160-2055
A10C39	0160-2055		CAPACITOR-FXD .01UF +80-20% 100WVDC CER	28480	0160-2055
A10C41	0160-2055		CAPACITOR-FXD .01UF +80-20% 100WVDC CER	28480	0160-2055
A10C42	0160-2055		CAPACITOR-FXD .01UF +80-20% 100WVDC CER	28480	0160-2055
A10C43	0160-2055		CAPACITOR-FXD .01UF +80-20% 100WVDC CER	28480	0160-2055
A10C44	0160-3466		CAPACITOR-FXD 100PF +-10% 1000WVDC CER	28480	0160-3466
A10C45	0180-0230		CAPACITOR-FXD 1UF+-20% 50VDC TA	56289	150D105X0050A2
A10C46	0180-0229		CAPACITOR-FXD 33UF+-10% 10VDC TA	56289	150D336X9010B2
A10C47	0160-2055		CAPACITOR-FXD .01UF +80-20% 100WVDC CER	28480	0160-2055
A10C48	0160-2055		CAPACITOR-FXD .01UF +80-20% 100WVDC CER	28480	0160-2055
A10C49	0160-2055		CAPACITOR-FXD .01UF +80-20% 100WVDC CER	28480	0160-2055

ΔC SERIAL NUMBERS 1622A01806 AND ABOVE. REPLACES 0160-0159.
ΔH SEE NOTE ON SCHEMATIC 8.

Table 6-3. Replaceable Parts (Cont'd)

Reference Designation	HP Part Number	Qty	Description	Mfr Code	Mfr Part Number
A10C51	0160-2055		CAPACITOR-FXD .01UF +80-20% 100WVDC CER	28480	0160-2055
A10C52	0160-2605		CAPACITOR-FXD .02UF +80-20% 25WVDC CER	28480	0160-2605
A10C53	0160-2605		CAPACITOR-FXD .02UF +80-20% 25WVDC CER	28480	0160-2605
A10C54	0180-0230		CAPACITOR-FXD 1UF+-20% 50VDC TA	56289	150D105X0050A2
A10C55	0160-0127		CAPACITOR-FXD 1UF +-20% 25WVDC CER	28480	0160-0127
A10C56	0180-0230		CAPACITOR-FXD 1UF+-20% 50VDC TA	56289	150D105X0050A2
A10C57	0180-2628	2	CAPACITOR-FXD 220UF+50-10% 50VDC AL	28480	0180-2628
A10C58	0180-2628		CAPACITOR-FXD 220UF+50-10% 50VDC AL	28480	0180-2628
A10C59	0180-0230		CAPACITOR-FXD 1UF+-20% 50VDC TA	56289	150D105X0050A2
A10C61	0180-0693		CAPACITOR-FXD 1000UF+50-10% 25VDC AL	00220	25V85L1000
A10C62	0180-0693		CAPACITOR-FXD 1000UF+50-10% 25VDC AL	00220	25V85L1000
A10C63	0180-0230		CAPACITOR-FXD 1UF+-20% 50VDC TA	56289	150D105X0050A2
A10C65	0180-0695	1	CAPACITOR-FXD 4200UF+100-10% 12VDC AL	28480	0180-0695
A10C66	0180-0230		CAPACITOR-FXD 1UF+-20% 50VDC TA	56289	150D105X0050A2
A10CR1	1901-0586	6	DIODE-GEN PRP 30V 25MA TO-72	28480	1901-0586
A10CR2	1901-0586		DIODE-GEN PRP 30V 25MA TO-72	28480	1901-0586
A10CR3	1902-3104	2	DIODE-ZNR 5.62V 5% DO-7 PD=.4W TC=+.016%	15818	CD 35634
A10CR4	1901-0050		DIODE-SWITCHING 80V 200MA 2NS DO-7	28480	1901-0050
A10CR5	1901-0050		DIODE-SWITCHING 80V 200MA 2NS DO-7	28480	1901-0050
A10CR6	1901-0050		DIODE-SWITCHING 80V 200MA 2NS DO-7	28480	1901-0050
A10CR7	1902-0184	5	DIODE-ZNR 16.2V 5% DO-7 PD=.4W TC=+.066%	04713	SZ 10939-242
A10CR8	1901-0050		DIODE-SWITCHING 80V 200MA 2NS DO-7	28480	1901-0050
A10CR9	1902-0184		DIODE-ZNR 16.2V 5% DO-7 PD=.4W TC=+.066%	04713	SZ 10939-242
A10CR11	1902-0184		DIODE-ZNR 16.2V 5% DO-7 PD=.4W TC=+.066%	04713	SZ 10939-242
A10CR12	1901-0050		DIODE-SWITCHING 80V 200MA 2NS DO-7	28480	1901-0050
A10CR13	1901-0050		DIODE-SWITCHING 80V 200MA 2NS DO-7	28480	1901-0050
A10CR14	1902-3002	1	DIODE-ZNR 2.37V 5% DO-7 PD=.4W TC=-.074%	15818	CD 35526
A10CR15	1902-0049		DIODE-ZNR 6.19V 5% DO-7 PD=.4W TC=+.022%	28480	1902-0049
A10CR16	1901-0050		DIODE-SWITCHING 80V 200MA 2NS DO-7	28480	1901-0050
A10CR17	1901-0050		DIODE-SWITCHING 80V 200MA 2NS DO-7	28480	1901-0050
A10CR18	1901-0586		DIODE-GEN PRP 30V 25MA TO-72	28480	1901-0586
A10CR19	1901-0586		DIODE-GEN PRP 30V 25MA TO-72	28480	1901-0586
A10CR21	1901-0586		DIODE-GEN PRP 30V 25MA TO-72	28480	1901-0586
A10CR22	1901-0586		DIODE-GEN PRP 30V 25MA TO-72	28480	1901-0586
A10CR23	1901-0050		DIODE-SWITCHING 80V 200MA 2NS DO-7	28480	1901-0050
A10CR24	1901-0050		DIODE-SWITCHING 80V 200MA 2NS DO-7	28480	1901-0050
A10CR25	1901-0050		DIODE-SWITCHING 80V 200MA 2NS DO-7	28480	1901-0050
A10CR26	1901-0050		DIODE-SWITCHING 80V 200MA 2NS DO-7	28480	1901-0050
A10CR27	1901-0376	4	DIODE-GEN PRP 35V 50MA DO-7	28480	1901-0376
A10CR28	1901-0376		DIODE-GEN PRP 35V 50MA DO-7	28480	1901-0376
A10CR29	1902-0184		DIODE-ZNR 16.2V 5% DO-7 PD=.4W TC=+.066%	04713	SZ 10939-242
A10CR31	1902-0184		DIODE-ZNR 16.2V 5% DO-7 PD=.4W TC=+.066%	04713	SZ 10939-242
A10CR32	1901-0050		DIODE-SWITCHING 80V 200MA 2NS DO-7	28480	1901-0050
A10CR33	1901-0050		DIODE-SWITCHING 80V 200MA 2NS DO-7	28480	1901-0050
A10CR34	1901-0050		DIODE-SWITCHING 80V 200MA 2NS DO-7	28480	1901-0050
A10CR35	1901-0050		DIODE-SWITCHING 80V 200MA 2NS DO-7	28480	1901-0050
A10CR36	1901-0050		DIODE-SWITCHING 80V 200MA 2NS DO-7	28480	1901-0050
A10CR37	1901-0050		DIODE-SWITCHING 80V 200MA 2NS DO-7	28480	1901-0050
A10CR38	1901-0050		DIODE-SWITCHING 80V 200MA 2NS DO-7	28480	1901-0050
A10CR39	1901-0050		DIODE-SWITCHING 80V 200MA 2NS DO-7	28480	1901-0050
A10CR41	1901-0050		DIODE-SWITCHING 80V 200MA 2NS DO-7	28480	1901-0050
A10CR42	1901-0050		DIODE-SWITCHING 80V 200MA 2NS DO-7	28480	1901-0050
A10CR43	1901-0050		DIODE-SWITCHING 80V 200MA 2NS DO-7	28480	1901-0050
A10CR44	1901-0050		DIODE-SWITCHING 80V 200MA 2NS DO-7	28480	1901-0050
A10CR45	1901-0050		DIODE-SWITCHING 80V 200MA 2NS DO-7	28480	1901-0050
A10CR46	1901-0050		DIODE-SWITCHING 80V 200MA 2NS DO-7	28480	1901-0050
A10CR47	1901-0050		DIODE-SWITCHING 80V 200MA 2NS DO-7	28480	1901-0050
A10CR48	1901-0028		DIODE-PWR RECT 400V 750MA DO-29	28480	1901-0028
A10CR49	1901-0028		DIODE-PWR RECT 400V 750MA DO-29	28480	1901-0028
A10CR51	1901-0028		DIODE-PWR RECT 400V 750MA DO-29	28480	1901-0028
A10CR52	1901-0028		DIODE-PWR RECT 400V 750MA DO-29	28480	1901-0028
A10CR53	1901-0028		DIODE-PWR RECT 400V 750MA DO-29	28480	1901-0028
A10CR54	1901-0028		DIODE-PWR RECT 400V 750MA DO-29	28480	1901-0028
A10CR55	1901-0028		DIODE-PWR RECT 400V 750MA DO-29	28480	1901-0028
A10CR56	1901-0028		DIODE-PWR RECT 400V 750MA DO-29	28480	1901-0028
A10CR57	1901-0028		DIODE-PWR RECT 400V 750MA DO-29	28480	1901-0028
A10CR58	1901-0028		DIODE-PWR RECT 400V 750MA DO-29	28480	1901-0028
A10CR59	1901-0050		DIODE-SWITCHING 80V 200MA 2NS DO-7	28480	1901-0050
A10CR61	1902-0049		DIODE-ZNR 6.19V 5% DO-7 PD=.4W TC=+.022%	28480	1902-0049
A10CR62	1901-0200		DIODE-PWR RECT 100V 1.5A	04713	SR1846-9
A10CR63	1901-0200		DIODE-PWR RECT 100V 1.5A	04713	SR1846-9
A10CR64	1902-0176	2	DIODE-ZNR 47.5V 5% DO-15 PD=1W TC=+.081%	04713	SZ-11213-335
A10CR65	1902-0049		DIODE-ZNR 6.19V 5% DO-7 PD=.4W TC=+.022%	28480	1902-0049
A10CR66	1902-0176		DIODE-ZNR 47.5V 5% DO-15 PD=1W TC=+.081%	04713	SZ-11213-335

Table 6-3. Replaceable Parts (Cont'd)

Reference Designation	HP Part Number	Qty	Description	Mfr Code	Mfr Part Number
A10CR67	1902-3104		DIODE-ZNR 5.62V 5% DO-7 PD=.4W TC=+.016%	15818	CD 35634
A10CR68	1902-0631		DIODE-ZNR 1N5351B 14V 5% PD=5W TC=+75%	04713	1N5351B
A10CR69	1901-0050		DIODE-SWITCHING 80V 200MA 2NS DO-7	28480	1901-0050
A10CR71, 72 Δ	1901-0050		DIODE-SWITCHING 80V 200MA 2NS DO-7	28480	1901-0050
A10E1	1970-0077	1	*SURGE V PTCTR	28480	1970-0077
A10E2	8110-0052	1	WIRE-RES 2.6-OHM/FT .01-DIA	28480	8110-0052
A10J1	1251-2035		CONNECTOR-PC EDGE 15-CONT/ROW 2-ROWS	71785	252-15-30-300
A10J2	1251-2035		CONNECTOR-PC EDGE 15-CONT/ROW 2-ROWS	71785	252-15-30-300
A10J3	1251-4189	1	CONNECTOR-PC EDGE 15-CONT/ROW 2 ROWS		
A10J4	1251-4325	1	CONNECTOR 10-PIN M POST TYPE	28480	1251-4325
A10J5	1251-3192	1	CONNECTOR 3-PIN M POST TYPE	27264	09-60-1031(2403-03A)
A10K1	0490-0740	1	RELAY:REED	28480	0490-0740
A10K2	0490-0663	11	RELAY-REED 1A 100MA 1000VDC 5VDC-COIL	28480	0490-0663
A10K3	0490-0663		RELAY-REED 1A 100MA 1000VDC 5VDC-COIL	28480	0490-0663
A10K4	0490-0664	4	RELAY-REED 1A 100MA 250VDC 5VDC-COIL	28480	0490-0664
A10K5	0490-0663		RELAY-REED 1A 100MA 1000VDC 5VDC-COIL	28480	0490-0663
A10K6	0490-0663		RELAY-REED 1A 100MA 1000VDC 5VDC-COIL	28480	0490-0663
A10K7	0490-0664		RELAY-REED 1A 100MA 250VDC 5VDC-COIL	28480	0490-0664
A10K8	0490-0664		RELAY-REED 1A 100MA 250VDC 5VDC-COIL	28480	0490-0664
A10K9	0490-0664		RELAY-REED 1A 100MA 250VDC 5VDC-COIL	28480	0490-0664
A10L1	9100-1641	1	COIL-MLD 240UH 5% Q=65 .155DX.375LG	24226	15/243
A10P1	1251-4311	1	CONNECTOR 8-PIN F POST TYPE	27264	22-01-2081
	1251-3476		CONTACT-CONN U/W POST TYPE FEM CRP (P/O P1)	28480	1251-3476
A10P3	1251-4310	1	CONNECTOR 2-PIN F POST TYPE	27264	22-01-1021
A10Q1	5088-7028	4	TRANSISTOR, FET	28480	5088-7028
A10Q2	5088-7028		TRANSISTOR, FET	28480	5088-7028
A10Q3 ΔD	5090-7047	9	TRANSISTOR, FET	28480	5090-7047
A10Q4 ΔD	5090-7047		TRANSISTOR, FET	28480	5090-7047
A10Q5	1855-0308	1	TRANSISTOR-JFET DUAL N-CHAN D-MODE SI	28480	1855-0308
A10Q6	1855-0247	3	TRANSISTOR-JFET DUAL N-CHAN D-MODE TO-71	28480	1855-0247
A10Q7	1854-0071	13	TRANSISTOR NPN SI PD=300MW FT=200MHZ	28480	1854-0071
A10Q8	1853-0086	1	TRANSISTOR PNP SI PD=310MW FT=40MHZ	28480	1853-0086
A10Q9	1853-0020		TRANSISTOR PNP SI PD=300MW FT=150MHZ	28480	1853-0020
A10Q11	1854-0071		TRANSISTOR NPN SI PD=300MW FT=200MHZ	28480	1854-0071
A10Q12	1854-0087	3	TRANSISTOR NPN SI PD=360MW FT=75MHZ	28480	1854-0087
A10Q13	5088-7028		TRANSISTOR, FET	28480	5088-7028
A10Q14	5088-7028		TRANSISTOR, FET	28480	5088-7028
A10Q15 ΔD	5090-7047		TRANSISTOR, FET	28480	5090-7047
A10Q16 ΔD	5090-7047		TRANSISTOR, FET	28480	5090-7047
A10Q17	1855-0246	2	TRANSISTOR-JFET DUAL N-CHAN D-MODE TO-71	28480	1855-0246
A10Q18 ΔD	5090-7047		TRANSISTOR, FET	28480	5090-7047
A10Q19 ΔD	5090-7047		TRANSISTOR, FET	28480	5090-7047
A10Q21 ΔD	5090-7047		TRANSISTOR, FET	28480	5090-7047
A10Q22	1855-0420	11	TRANSISTOR J-FET 2N4391 N-CHAN D-MODE	04713	2N4391
A10Q23	1854-0087		TRANSISTOR NPN SI PD=360MW FT=75MHZ	28480	1854-0087
A10Q24	1854-0071		TRANSISTOR NPN SI PD=300MW FT=200MHZ	28480	1854-0071
A10Q25	1854-0071		TRANSISTOR NPN SI PD=300MW FT=200MHZ	28480	1854-0071
A10Q26	1853-0020		TRANSISTOR PNP SI PD=300MW FT=150MHZ	28480	1853-0020
A10Q27	1855-0368	6	TRANSISTOR J-FET N-CHAN D-MODE TO-72 SI	28480	1855-0368
A10Q28	1855-0368		TRANSISTOR J-FET N-CHAN D-MODE TO-72 SI	28480	1855-0368
A10Q29	1855-0368		TRANSISTOR J-FET N-CHAN D-MODE TO-72 SI	28480	1855-0368
A10Q31	1855-0244	2	*TRANSISTOR, JFET N-CHANNEL ZN4857	28480	1855-0244
A10Q32	1855-0244		*TRANSISTOR, JFET N-CHANNEL ZN4857	28480	1855-0244
A10Q33	1855-0420		TRANSISTOR J-FET 2N4391 N-CHAN D-MODE	04713	2N4391
A10Q34	1855-0420		TRANSISTOR J-FET 2N4391 N-CHAN D-MODE	04713	2N4391
A10Q35	1855-0368		TRANSISTOR J-FET N-CHAN D-MODE TO-72 SI	28480	1855-0368
A10Q36	1855-0368		TRANSISTOR J-FET N-CHAN D-MODE TO-72 SI	28480	1855-0368
A10Q37 †	1855-0460	1	TRANSISTOR-JFET DUAL N-CHAN D-MODE TO-71	28480	1855-0460
A10Q38 ΔD	5090-7047		TRANSISTOR, FET	28480	5090-7047
A10Q39 ΔD	5090-7047		TRANSISTOR, FET	28480	5090-7047
A10Q40	1855-0368		TRANSISTOR J-FET N-CHAN D-MODE TO-72 SI	28480	1855-0368
A10Q41	1853-0020		TRANSISTOR PNP SI PD=300MW FT=150MHZ	28480	1853-0020
A10Q42	1853-0020		TRANSISTOR PNP SI PD=300MW FT=150MHZ	28480	1853-0020
A10Q43	1853-0020		TRANSISTOR PNP SI PD=300MW FT=150MHZ	28480	1853-0020
A10Q44	1854-0071		TRANSISTOR NPN SI PD=300MW FT=200MHZ	28480	1854-0071
A10Q45	1854-0071		TRANSISTOR NPN SI PD=300MW FT=200MHZ	28480	1854-0071
A10Q46	1853-0020		TRANSISTOR PNP SI PD=300MW FT=150MHZ	28480	1853-0020
A10R1	0813-0032	2	RESISTOR 50K 5% 5W PW TC=0+-20	91637	RS-5
A10R2	0813-0032		RESISTOR 50K 5% 5W PW TC=0+-20	91637	RS-5
A10R3	0698-8737	12	RESISTOR 100K 5% .25W CC TC=-400/+800	01121	CB1045
A10R4	0698-8737		RESISTOR 100K 5% .25W CC TC=-400/+800	01121	CB1045
A10R5	0683-1535	4	RESISTOR 15K 5% .25W FC TC=-400/+800	01121	CB1535
A10R6	0683-2445	2	RESISTOR 240K 5% .25W FC TC=-800/+900	01121	CB2445
A10R7	0683-2445		RESISTOR 240K 5% .25W FC TC=-800/+900	01121	CB2445
A10R8	0757-0446	2	RESISTOR 15K 1% .125W F TC=0+-100	24546	C4-1/8-TO-1502-F
A10R9	0757-0446		RESISTOR 15K 1% .125W F TC=0+-100	24546	C4-1/8-TO-1502-F
A10R11 ΔC	0683-1325	9	RESISTOR 1.3K 5% .25W FC TC=-400/+700	01607	CB1325

ΔC SERIAL NUMBERS 1622A01806 AND ABOVE. REPLACES 0683-2025.
ΔD SEE NOTE ON SCHEMATIC 1.
Δ Diodes CR71 and CR72 apply only to serial numbers 1622A00411 and above.

Table 6-3. Replaceable Parts (Cont'd)

Reference Designation	HP Part Number	Qty	Description	Mfr Code	Mfr Part Number
A10R12	0683-3325	1	RESISTOR 3.3K 5% .25W FC TC=-400/+700	01121	CB3325
A10R13	0698-8737		RESISTOR 100K 5% .25W CC TC=-400/+800	01121	CB1045
A10R14	0683-1015	2	RESISTOR 100 5% .25W FC TC=-400/+500	01121	CB1015
A10R15	0683-8225	1	RESISTOR 8.2K 5% .25W FC TC=-400/+700	01121	CB8225
A10R16	0683-1535		RESISTOR 15K 5% .25W FC TC=-400/+800	01121	CB1535
A10R17	0683-2035	8	RESISTOR 20K 5% .25W FC TC=-400/+800	01121	CB2035
A10R18	0698-4479	2	RESISTOR 14K 1% .125W F TC=0+-100	24546	C4-1/8-T0-1402-F
A10R19	0698-3136	1	RESISTOR 17.8K 1% .125W F TC=0+-100	24546	C4-1/8-T0-1782-F
A10R21	0683-5625	3	RESISTOR 5.6K 5% .25W FC TC=-400/+700	01121	CB5625
A10R22	0683-5625		RESISTOR 5.6K 5% .25W FC TC=-400/+700	01121	CB5625
A10R23	0683-1535		RESISTOR 15K 5% .25W FC TC=-400/+800	01121	CB1535
A10R24	0698-8777	8	RESISTOR, FXD 1000 OHM .05	28480	0698-8777
A10R25	0698-4479		RESISTOR 14K 1% .125W F TC=0+-100	24546	C4-1/8-T0-1402-F
A10R26	0683-1825	1	RESISTOR 1.8M 5% .25W FC TC=-400/+700	01121	CB1825
A10R27	0683-2215		RESISTOR 220 5% .25W FC TC=-400/+600	01121	CB2215
A10R28	0683-5145	7	RESISTOR 510K 5% .25W FC TC=-800/+900	01121	CB5145
A10R29	0698-8737		RESISTOR 100K 5% .25W CC TC=-400/+800	01121	CB1045
A10R31	0683-1035	15	RESISTOR 10K 5% .25W FC TC=-400/+700	01121	CB1035
A10R32	0683-5625		RESISTOR 5.6K 5% .25W FC TC=-400/+700	01121	CB5625
A10R33	0683-9115	1	RESISTOR 910 5% .25W FC TC=-400/+600	01121	CB9115
A10R34	0698-8737		RESISTOR 100K 5% .25W CC TC=-400/+800	01121	CB1045
A10R35	0811-3415	1	RESISTOR 76.8 1% 1W PW TC=0+-20	91637	RS-1A
A10R36	0698-8776	1	*RESISTOR, FXD 10 OHM .05	28480	0698-8776
A10R37	0683-2035		RESISTOR 20K 5% .25W FC TC=-400/+800	01121	CB2035
A10R38	0698-8777		RESISTOR, FXD 1000 OHM .05	28480	0698-8777
A10R39	0698-8737		RESISTOR 100K 5% .25W CC TC=-400/+800	01121	CB1045
A10R41	0698-8693	2	RESISTOR 20K 1% .125W F TC=0+-25	03888	PME55S
A10R42	0698-8692	1	RESISTOR 16OK 1% .125W F TC=0+-25	03888	PME55S
A10R43	0698-8693		RESISTOR 20K 1% .125W F TC=0+-25	03888	PME55S
A10R44	0698-8737		RESISTOR 100K 5% .25W CC TC=-400/+800	01121	CB1045
A10R45	0683-5135	1	RESISTOR 51K 5% .25W FC TC=-400/+800	01121	CB5135
A10R46	0698-8777		RESISTOR, FXD 1000 OHM .05	28480	0698-8777
A10R47	0811-3461	2	RESISTIVE SET, 10M/100 KOHM (INCLUDES R63)	28480	0811-3461
A10R48	1810-0232	2	NETWORK-RES 8-PIN-SIP .1-PIN-SPCG 7X100K	56289	216CH104X9PM
A10R49	1810-0232		NETWORK-RES 8-PIN-SIP .1-PIN-SPCG 7X100K	56289	216CH104X9PM
A10R51	0698-8737		RESISTOR 100K 5% .25W CC TC=-400/+800	01121	CB1045
A10R52	0683-2025		RESISTOR 2K 5% .25W FC TC=-400/+700	01121	CB2025
A10R53	0683-6225	1	RESISTOR 6.2K 5% .25W FC TC=-400/+700	01121	CB6225
A10R54	0698-7332	2	RESISTOR 1M 1% .125W F TC=0+-100	19701	MF5C1/8-T0-1004-F
A10R55	0698-7332		RESISTOR 1M 1% .125W F TC=0+-100	19701	MF5C1/8-T0-1004-F
A10R56	0683-5145		RESISTOR 510K 5% .25W FC TC=-800/+900	01121	CB5145
A10R57	0698-6320	5	RESISTOR 5K .1% .125W F TC=0+-25	03888	PME55-1/8-T9-5001-B
A10R58	0698-6320		RESISTOR 5K .1% .125W F TC=0+-25	03888	PME55-1/8-T9-5001-B
A10R59	0693-1041	2	RESISTOR 100K 10% 2W CC TC=0+882	01121	HB1041
A10R61	0693-1041		RESISTOR 100K 10% 2W CC TC=0+882	01121	HB1041
A10R62	0698-8737		RESISTOR 100K 5% .25W CC TC=-400/+800	01121	CB1045
A10R63	0811-3461		RESISTIVE SET, 10M/100 KOHM (INCLUDES R47)	28480	0811-3461
A10R64	0698-8777		RESISTOR, FXD 1000 OHM .05	28480	0698-8777
A10R65	0683-7535	1	RESISTOR 75K 5% .25W FC TC=-400/+800	01121	CB7535
A10R66	2100-3383	1	RESISTOR-TRMR 50 10% C TOP-ADJ 1-TRN	73138	72-101-0
A10R67	0683-2025		RESISTOR 2K 5% .25W FC TC=-400/+700	01121	CB2025
A10R68	0698-8737		RESISTOR 100K 5% .25W CC TC=-400/+800	01121	CB1045
A10R69	0757-0465		RESISTOR 100K 1% .125W F TC=0+-100	24546	C4-1/8-T0-1003-F
A10R71	0757-0465		RESISTOR 100K 1% .125W F TC=0+-100	24546	C4-1/8-T0-1003-F
A10R72	0683-2015		RESISTOR 200 5% .25W FC TC=-400/+600	01121	CB2015
A10R73	0757-0460	1	RESISTOR 61.9K 1% .125W F TC=0+-100	24546	C4-1/8-T0-6192-F
A10R74	0683-4725	6	RESISTOR 4.7K 5% .25W FC TC=-400/+700	01121	CB4725
A10R75	0683-1035		RESISTOR 10K 5% .25W FC TC=-400/+700	01121	CB1035
A10R76	0683-2035		RESISTOR 20K 5% .25W FC TC=-400/+800	01121	CB2035
A10R77	0683-4725		RESISTOR 4.7K 5% .25W FC TC=-400/+700	01121	CB4725
A10R78	0683-4725		RESISTOR 4.7K 5% .25W FC TC=-400/+700	01121	CB4725
A10R79	0698-8777		RESISTOR FXD 1000 OHM .05	28480	0698-8777
A10R81	0683-2025		RESISTOR 2K 5% .25W FC TC=400/+800	01121	CB2025
A10R82	0683-9145	1	RESISTOR 910K 5% .25W FC TC=-800/+900	01121	CB9145
A10R83	0698-8737		RESISTOR 100K 5% .25W CC TC=-400/+800	01121	CB1045
A10R84	0683-1035		RESISTOR 10K 5% .25W FC TC=-400/+700	01121	CB1035
A10R85	0698-8737		RESISTOR 100K 5% .25W CC TC=-400/+800	01121	CB1045
A10R86	0698-8777		RESISTOR, FXD 1000 OHM .05	28480	0698-8777
A10R87	0698-8777		RESISTOR, FXD 1000 OHM .05	28480	0698-8777
A10R88	0683-5115	2	RESISTOR 510 5% .25W FC TC=-400/+600	01121	CB5115
A10R89	0683-5115		RESISTOR 510 5% .25W FC TC=-400/+600	01121	CB5115
A10R91	0683-2035		RESISTOR 20K 5% .25W FC TC=-400/+800	01121	CB2035
A10R92	0683-2035		RESISTOR 20K 5% .25W FC TC=-400/+800	01121	CB2035
A10R93	0683-3025	4	RESISTOR 3K 5% .25W FC TC=-400/+700	01121	CB3025
A10R94	0683-2025		RESISTOR 2K 5% .25W FC TC=-400/+700	01121	CB2025

See introduction to this section for ordering information

Table 6-3. Replaceable Parts (Cont'd)

Reference Designation	HP Part Number	Qty	Description	Mfr Code	Mfr Part Number
A10R95	0683-2015		RESISTOR 200 5% .25W FC TC=-400/+600	01121	CB2015
A10R96	0683-2015		RESISTOR 200 5% .25W FC TC=-400/+600	01121	CB2015
A10R97	0683-2025		RESISTOR 2K 5% .25W FC TC=-400/+700	01121	CB2025
A10R98	0683-2025		RESISTOR 2K 5% .25W FC TC=-400/+700	01121	CB2025
A10R99	0698-8777		RESISTOR FXD 1000 OHM .05	28480	0698-8777
A10R101, R102	0683-2035		RESISTOR 20K 5% .25W FC TC=-400/+800	01121	CB2035
A10R103	0683-4725		RESISTOR 4.7K 5% .25W FC TC=-400/+800	01121	CB4725
A10R104	0683-1335	1	RESISTOR 13K 5% .25W FC TC=-400/+800	01121	CB1335
A1R105 ΔD					
A10R106	0757-0274		RESISTOR 1.21K 1% .125W F TC=0+-100	24546	C4-1/8-TO-1213-F
A10R107	0683-2025		RESISTOR 2K 5% .25W FC TC=-400/+700	01121	CB2025
A10R108	0683-4725		RESISTOR 4.7K 5% .25W FC TC=-400/+700	01121	CB4725
A10R109	0683-4725		RESISTOR 4.7K 5% .25W FC TC=-400/+700	01121	CB4725
A10R111 ΔA	0683-4725		RESISTOR 4.7K 5% .25W FC TC=-400/+700	01121	CB4725
A10S1 ΔB	0490-0802	1	SWITCH-MAG REED FORM A 3VA 200V CONT.	28480	0490-0802
A10T1	9100-0678	1	TRANSFORMER, PULSE	28480	9100-0678
A10T2	9100-3879	1	TRANSFORMER, PULSE	28480	9100-3879
A10U1	1826-0343	2	IC MC 1436C OP AMP	04713	MC1436CG
A10U2	1826-0109	2	IC HA 2625 OP AMP	28480	1826-0109
A10U3 †	1826-0371	1	IC LF 256H OP AMP	27014	LF256H
A10U4	1826-0347	5	IC, J COMPUTER LM339 SPEC.	28480	1826-0347
A10U5	1826-0347		IC, J COMPUTER LM339 SPEC.	28480	1826-0347
A10U6	1826-0347		IC, J COMPUTER LM339 SPEC.	28480	1826-0347
A10U7	1826-0471	1	IC OP AMP LOW-DRIFT TO-99	02180	OP-07CJ
A10U8	1826-0347		IC, J COMPUTER LM339 SPEC.	28480	1826-0347
A10U9	1826-0347		IC, J COMPUTER LM339 SPEC.	28480	1826-0347
A10U11	1820-1196		IC-DIGITAL SN74LS174N TTL LS HEX	01295	SN74LS174N
A10U12	1820-1196		IC-DIGITAL SN74LS174N TTL LS HEX	01295	SN74LS174N
A10U13	1820-1196		IC-DIGITAL SN74LS174N TTL LS HEX	01295	SN74LS174N
A10U14	1820-1216		IC-DIGITAL SN74LS138N TTL LS 3	01295	SN74LS138N
A10U15	1820-1196		IC-DIGITAL SN74LS174N TTL LS HEX	01295	SN74LS174N
A10U16	1820-1196		IC-DIGITAL SN74LS174N TTL LS HEX	01295	SN74LS174N
A10U17	1820-1196		IC-DIGITAL SN74LS174N TTL LS HEX	01295	SN74LS174N
A10U18	1826-0343		IC MC 1436C OP AMP	04713	MC1436CG
A10U19	1820-0471	4	IC-DIGITAL SN7406N TTL HEX 1	01295	SN7406N
A10U21	1820-1197		IC-DIGITAL SN74LS00N TTL LS QUAD 2 NAND	01295	SN74LS00N
A10U22	1820-1199		IC-DIGITAL SN74LS04N TTL LS HEX 1	01295	SN74LS04N
A10U23	1820-1420	2	IC-DIGITAL SN74LS92N TTL LS DIV-X-12	01295	SN74LS92N
A10U24	1820-0471		IC-DIGITAL SN7406N TTL HEX 1	01295	SN7406N
A10U25	1818-2270	1	IC, MOS-ROM	28480	1818-2270
A10U26	03455-62501		NANOPROCESSOR ASSY INCLUDES A10R105*	28480	03455-62501
A10U27	1820-1198		IC-DIGITAL SN74LS03N TTL LS QUAD 2 NAND	01295	SN74LS03N
A10U28	1820-1199		IC-DIGITAL SN74LS04N TTL LS HEX 1	01295	SN74LS04N
A10U29	1820-1197		IC-DIGITAL SN74LS00N TTL LS QUAD 2 NAND	01295	SN74LS00N
A10U31	1820-1420		IC-DIGITAL SN74LS92N TTL LS DIV-X-12	01295	SN74LS92N
A10U32	1820-1112		IC-DIGITAL SN74LS74N TTL LS DUAL	01295	SN74LS74N
A10U33	1820-1112		IC-DIGITAL SN74LS74N TTL LS DUAL	01295	SN74LS74N
A10U34	1990-0577	2	OPTO-ISOLATOR LED-PDIO/XSTR IF=50MA-MAX	28480	1990-0577
A10U35	1990-0577		OPTO-ISOLATOR LED-PDIO/XSTR IF=50MA-MAX	28480	1990-0577
A10U36	1826-0150	1	IC V RGLTR	27014	SL26683-24
A10U37	1826-0299	1	IC V RGLTR	27014	LM320T-24
A10U38	1826-0398	1	IC 7815C V RGLTR	02237	7815UC
A10U39	1826-0277	1	IC LM 320 V RGLTR	27014	LM320T-15
	1205-0309	4	HEAT SINK SGL TO-220-PKG	28480	1205-0309
A10W1	03455-61607	1	CABLE ASSEMBLY, L.I.(INCLUDES P1)	28480	03455-61607
A10W2	03455-61608	1	CABLE, 10/1 DIVIDER	28480	03455-61608
A10X1	1200-0466	1	SOCKET-IC 40-CONT DIP-SLDR	0011J	A-23-2030Y
A10Y1	0410-0663	1	CRYSTAL, QUARTZ 4915.200 kHz	28480	0410-0663
	5040-0170		GUIDE:PLUG-IN PC BOARD	28480	5040-0170
A11 ΔC	11177-69501	1	ASSEMBLY, REFERENCE	28480	
			NOT FIELD REPAIRABLE. REBUILT EXCHANGE ASSEMBLY		
	11177B		REPLACEMENT ASSEMBLY		

ΔA RESISTOR A10R111 APPLIES ONLY TO SERIAL NUMBERS 1622A00411 AND ABOVE.
ΔB REED SWITCH A10S1 APPLIES ONLY TO SERIAL NUMBERS 1622A00410 AND BELOW.
ΔC REPLACE WITH A20 ASSEMBLY PART NUMBER 11177B FOR REPLACEMENT OR EXCHANGE.
ΔD SEE NOTE ON SCHEMATIC 11.

Table 6-3. Replaceable Parts (Cont'd)

Reference Designation	HP Part Number	C D	Qty	Description	Mfr Code	Mfr Part Number
A12	03455-66512		1	PC ASSEMBLY, OHM CONVERTOR	28480	03455-66512
A12C1	0180-0230			CAPACITOR-FXD 1UF +-20% 50VDC TA	56289	150D105X0050A2
A12C2	0160-0164		1	CAPACITOR-FXD .039UF +-10% 200VDC	28480	0160-0164
A12C3 ΔB	0160-0157		1	CAPACITOR-FXD 4700PF +-10% 200VDC	28480	0160-0157
A12CR1-CR4	1901-0050			DIODE-SWITCHING 80V 200MA 2NS DO-7	28480	1901-0050
A12CR5	1902-0777		1	DIODE-ZNR 1N825 6.2V 5% DO-7 PD=.25W	04713	1N825
A12CR6,CR7	1901-0050			DIODE-SWITCHING 80V 200MA 2NS DO-7	28480	1901-0050
A12CR8	1901-0036		1	DIODE-HV RECT 1KV 600MA DO-29	28480	1901-0036
A12CR9	1902-3139		1	DIODE-ZNR 8.25V 5% DO-7 PD=.4W TC=+.053%	04713	SZ 10939-158
A12CR11-CR15	1901-0050			DIODE-SWITCHING 80V 200MA 2NS DO-7	28480	1901-0050
A12Q1	1855-0247			TRANSISTOR-JFET DUAL N-CHAN D-MODE TO-71	28480	1855-0247
A12Q2	1853-0020			TRANSISTOR PNP SI PD=300MW FT=150MHZ	28480	1853-0020
A12Q3	1854-0087			TRANSISTOR NPN SI PD=360MW FT=75MHZ	28480	1854-0087
A12Q4	1854-0079		1	TRANSISTOR NPN 2N3439 SI TO-5 PD=1W	02735	2N3439
A12Q5	1855-0247			TRANSISTOR=JFET DUAL N-CHAN D-MODE TO-71	28480	1855-0247
A12R1	0683-1115		1	RESISTOR 110 5% .25W FC TC=-400/+600	01121	CB1115
A12R2	0683-4325		1	RESISTOR 4.3K 5% .25W FC TC=-400/+700	01121	CB4325
A12R3	0757-0059		1	RESISTOR 1M 1% .5W F TC=0+-100	19701	MF7C1/2-TO-1004-F
A12R4	0683-2735		3	RESISTOR 27K 5% .25W FC TC=-400/+800	01121	CB2735
A12R5	0698-4468		1	RESISTOR 1.13K 1% .125W F TC=0+-100	24546	C4-1/8-TO-1131-F
A12R6	0698-4202		4	RESISTOR 8.87K 1% .125W F TC=0+-100	24546	C4-1/8-TO-8871-F
A12R7,R8 ΔA ΔB	0757-0442		6	RESISTOR 10K 1% .125W F TC=0+-100	03292	C4-1/8-TO-1002-F
A12R9	0683-1235		3	RESISTOR 12K 5% .25W FC TC=-400/+800	01121	CB1235
A12R11	0683-4715		2	RESISTOR 470 5% .25W FC TC=-400/+600	01121	CB4715
A12R12	0683-2425		1	RESISTOR 2.4K 5% .25W FC TC=-400/+700	01121	CB2425
A12R13	0683-3035		1	RESISTOR 30K 5% .25W FC TC=-400/+800	01121	CB3035
A12R14	0698-3451		1	RESISTOR 133K 1% .125W F TC=+-100	24546	C4-1/8-TO-1333-F
A12R15	0683-2735			RESISTOR 27K 5% .25W FC TC=-400/+800	01121	CB2735
A12R16,R17 ΔA ΔB	0757-0442			RESISTOR 10K 1% .125W F TC=0+-100	03292	C4-1/8-TO-1002-F
A12R18	0683-4335		3	RESISTOR 43K 5% .25W FC TC=-400/+800	01121	CB4335
A12R19	0683-1535			RESISTOR 15K 5% .25W FC TC=-400/+800	01121	CB1535
A12R21	0683-1235			RESISTOR 12K 5% .25W FC TC=-400/+800	01121	CB1235
A12R22	0683-1125		1	RESISTOR 1.1K 5% .25W FC TC=-400/+700	01121	CB1125

ΔA SEE NOTE ON SCHEMATIC 4.
ΔB SEE NOTE ON SCHEMATIC 4.

See introduction to this section for ordering information
*Indicates factory selected value

Table 6-3. Replaceable Parts (Cont'd)

Reference Designation	HP Part Number	Qty	Description	Mfr Code	Mfr Part Number
A12R23	0760-0009	1	RESISTOR 100K 2% 1W MO TC=0+-200	11502	RG32
A12T1	9100-0679	1	TRANSFORMER, PULSE	28480	9100-0679
A12U1	1820-0223	2	IC LM 301A OP AMP	27014	LM301AH
A12U2	1820-0223		IC LM 301A OP AMP	27014	LM301AH
A13	03455-66513	1	P.C. ASSEMBLY, AC CONVERTER	28480	03455-66513
A13C1	0160-2199	4	CAPACITOR-FXD 30PF +-5% 300WVDC MICA	28480	0160-2199
A13C2	0160-4404	1	CAPACITOR-FXD .15UF +-10% 100WVDC POLYP	28480	0160-4404
A13C3	0160-4401	3	CAPACITOR-FXD .01UF +-10% 100WVDC POLYP	28480	0160-4401
A13C4	0160-4402	1	CAPACITOR-FXD .1UF +-10% 100WVDC POLYP	28480	0160-4402
A13C5	0160-2199		CAPACITOR-FXD 30PF +-5% 300WVDC MICA	28480	0160-2199
A13C6	0160-4398	3	CAPACITOR-FXD .082UF +-10% 200WVDC POLYP	28480	0160-4398
A13C7	0160-4398		CAPACITOR-FXD .082UF +-10% 200WVDC POLYP	28480	0160-4398
A13C8	0160-4401		CAPACITOR-FXD .01UF +-10% 100WVDC POLYP	28480	0160-4401
A13C9	0160-4401		CAPACITOR-FXD .01UF +-10% 100WVDC POLYP	28480	0160-4401
A13C11	0180-0229		CAPACITOR-FXD 33UF+-10% 10VDC TA	56289	150D336X90.J8Z
A13C12	0180-0197		CAPACITOR-FXD 2.2UF+-10% 20VDC TA	56289	150D225X9020A2
A13C13	0180-1735		CAPACITOR-FXD .22UF+-10% 35VDC TA	56289	150D224X9035A2
A13C14	0160-2199		CAPACITOR-FXD 30PF +-5% 300WVDC MICA	28480	0160-2199
A13C15	0121-0432	1	CAPACITOR-V TRMR-AIR 1.7/14.1PF 350V	74970	189-505-125
A13C16	0160-0763	1	CAPACITOR-FXD 5PF +-10% 500WVDC MICA	28480	0160-0763
A13C17	0160-0363	1	CAPACITOR-FXD 620PF +-5% 300WVDC MICA	28480	0160-0363
A13C18	0180-1746	1	CAPACITOR-FXD 15UF+-10% 20VDC TA.	56289	150D156X902082
A13C19	0160-3949	2	CAPACITOR-FXD 346PF +-1% 500WVDC PORC	28480	0160-3949
A13C21	0150-0093		CAPACITOR-FXD .01UF +80-20% 100WVDC CER	28480	0150-0093
A13C22	0180-0197		CAPACITOR-FXD 2.2UF+-10% 20VDC TA	56289	150D225X9020A2
A13C23	0160-3134	2	CAPACITOR-FXD .01UF +-10% 100WVDC CER	28480	0160-3134
A13C24	0180-0197		CAPACITOR-FXD 2.2UF+-10% 20VDC TA	56289	150D225X9020A2
A13C25 4A	0160-0378		CAPACITOR-FXD 27PF +-5% 500VDC MICA	28480	0160-0181
	0160-2150		CAPACITOR-FXD 33PF +-5% 300WVDC MICA	28480	0160-2150
	0140-0190		CAPACITOR-FXD 39PF +-5% 300WVDC MICA	28480	0140-0190
A13C26	0160-3945	2	CAPACITOR-FXD 39PF +-1% 500WVDC MICA	28480	0160-3945
A13C27	0150-0096	1	CAPACITOR-FXD .05UF +80-20% 100WVDC CER	28480	0150-0096
A13C28	0160-2199		CAPACITOR-FXD 30PF +-5% 300WVDC MICA	28480	0160-2199
A13C29	0160-3976	1	CAPACITOR-FXD 10PF +-1% 1000WVAC PORC	28480	0160-3976
A13C31	0160-3977	1	CAPACITOR-FXD 970PF +-1% 100WVDC PORC	28480	0160-3977
A13C32	0140-0202	1	CAPACITOR-FXD 15PF +-5% 500WVDC MICA	72136	DM15C150J0500WVICR
A13C33	0160-3930	1	CAPACITOR-FXD 10PF +-1% 2500WVDC PORC	28480	0160-3930
A13C34	0121-0436	2	CAPACITOR-V TRMR-AIR 2.4/24.5PF 350V	74970	189-509-125
A13C35	0160-3581	2	CAPACITOR-FXD .1UF +-20% 630WVDC MET	FR002	00710460
A13CR1	1902-3237	3	DIODE-ZNR 20V 5% DO-7 PD=.4W TC=+.073%	04713	SZ 10939-269
A13CR2	1901-0033	2	DIODE-GEN PRP 180V 200MA DO-7	28480	1901-0033
A13CR3	1901-0040	24	DIODE-SWITCHING 30V 50MA 2NS DO-35	28480	1901-0040
A13CR4	1901-0033		DIODE-GEN PRP 180V 200MA DO-7	28480	1901-0033
A13CR5	1901-0518	5	DIODE-SCHOTTKY	28480	1901-0518
A13CR6	1901-0518		DIODE-SCHOTTKY	28480	1901-0518
A13CR7	1902-3128	1	DIODE-ZNR 7.32V 5% DO-7 PD=.4W TC=+.048%	04713	SZ 10939-143
A13CR8	1901-0040		DIODE-SWITCHING 30V 50MA 2NS DO-35	28480	1901-0040
A13CR9	1901-0040		DIODE-SWITCHING 30V 50MA 2NS DO-35	28480	1901-0040
A13CR10	1901-0040		DIODE-SWITCHING 30V 50MA 2NS DO-35	28480	1901-0040
A13CR12	1901-0040		DIODE-SWITCHING 30V 50MA 2NS DO-35	28480	1901-0040
A13CR13	1902-3086	2	DIODE-ZNR 4.75V 2% DO-7 PD=.4W TC=-.019%	04713	SZ 10939-90
A13CR14	1902-3086		DIODE-ZNR 4.75V 2% DO-7 PD=.4W TC=-.019%	04713	SZ 10939-90
A13CR15	1901-0040		DIODE-SWITCHING 30V 50MA 2NS DO-35	28480	1901-0040
A13CR16	1901-0040		DIODE-SWITCHING 30V 50MA 2NS DO-35	28480	1901-0040
A13CR17	1901-0047	2	DIODE-SWITCHING 20V 75MA 10NS	28480	1901-0047
A13CR18	1901-0047		DIODE-SWITCHING 20V 75MA 10NS	28480	1901-0047
A13CR19	1901-0040		DIODE-SWITCHING 30V 50MA 2NS DO-35	28480	1901-0040
A13CR21	1901-0040		DIODE-SWITCHING 30V 50MA 2NS DO-35	28480	1901-0040
A13CR22	1901-0040		DIODE-SWITCHING 30V 50MA 2NS DO-35	28480	1901-0040
A13K1	0490-0683		RELAY-REED 1A 100MA 1000VDC 5VDC-COIL	28480	0490-0683
A13K2	0490-0683		RELAY-REED 1A 100MA 1000VDC 5VDC-COIL	28480	0490-0683
A13K3	0490-0663		RELAY-REED 1A 100MA 1000VDC 5VDC-COIL	28480	0490-0663
A13Q1	1854-0071		TRANSISTOR NPN SI PD=300MW FT=200MHZ	28480	1854-0071
A13Q2	1854-0071		TRANSISTOR NPN SI PD=300MW FT=200MHZ	28480	1854-0071
A13Q3	1855-0386	4	TRANSISTOR J-FET 2N4392 N-CHAN D-MODE	04713	2N4392
A13Q4	1855-0386		TRANSISTOR J-FET 2N4392 N-CHAN D-MODE	04713	2N4392
A13Q5	1855-0386		TRANSISTOR J-FET 2N4392 N-CHAN D-MODE	04713	2N4392
A13Q6	1855-0386		TRANSISTOR J-FET 2N4392 N-CHAN D-MODE	04713	2N4392
A13Q7	1854-0351	2	TRANSISTOR NPN SI TO-18 PD=360MW	28480	1854-0351
A13Q8	1853-0010		TRANSISTOR PNP SI TO-18 PD=360MW	28480	1853-0010
A13Q9	1855-0420		TRANSISTOR J-FET 2N4391 N-CHAN D-MODE	04713	2N4391
A13Q11	1854-0351		TRANSISTOR NPN SI TO-18 PD=360MW	28480	1854-0351

4A SEE NOTE ON SCHEMATIC 2.

Table 6-3. Replaceable Parts (Cont'd)

Reference Designation	HP Part Number	Qty	Description	Mfr Code	Mfr Part Number
A13Q12	1853-0010		TRANSISTOR PNP SI TO-18 PD=360MW	28480	1853-0010
A13Q13	1854-0071		TRANSISTOR NPN SI PD=300MW FT=200MHZ	28480	1854-0071
A13Q14	1855-0420		TRANSISTOR J-FET 2N4391 N-CHAN D-MODE	04713	2N4391
A13Q15	1855-0202	1	TRANSISTOR-JFET DUAL N-CHAN D-MODE SI	17856	E421
A13R1	0683-5145		RESISTOR 510K 5% .25W FC TC=-800/+900	01121	CB5145
A13R2	0683-2235	8	RESISTOR 22K 5% .25W FC TC=-400/+800	01121	CB2235
A13R3	0683-2235		RESISTOR 22K 5% .25W FC TC=-400/+800	01121	CB2235
A13R4	0698-3458	2	RESISTOR 348K 1% .125W F TC=0+-100	91637	CMF-55-1, T-1
A13R5	0698-3458		RESISTOR 348K 1% .125W F TC=0+-100	91637	CMF-55-1, T-1
A13R6	0757-0465		RESISTOR 100K 1% .125W F TC=0+-100	24546	C4-1/8-T0-1003-F
A13R7	0757-0270	1	RESISTOR 249K 1% .125W F TC=0+-100	24546	C4-1/8-T0-2493-F
A13R8	0683-2235		RESISTOR 22K 5% .25W FC TC=-400/+800	01121	CB2235
A13R9	0683-1035		RESISTOR 10K 5% .25W FC TC=-400/+700	01121	CB1035
A13R11	0683-5145		RESISTOR 510K 5% .25W FC TC=-800/+900	01121	CB5145
A13R12	2100-3306	3	RESISTOR-TRMR 50K 10% C SIDE-ADJ 17-TRN	32997	3006P-1-503
A13R13	2100-3309	1	RESISTOR-TRMR 2K 10% C SIDE-ADJ 17-TRN	32997	3006P-1-202
A13R14	0698-4467	1	RESISTOR 1.05K 1% .125W F TC=0+-100	24546	C4-1/8-T0-1051-F
A13R15	0683-1035		RESISTOR 10K 5% .25W FC TC=-400/+700	01121	CB1035
A13R16	0757-0401		RESISTOR 100 1% .125W F TC=0+-100	24546	C4-1/8-T0-101-F
A13R17	0698-3122	1	RESISTOR 412 1% .125W F TC=0+-100	03888	PME55-1/8-T0-4120-F
A13R18	0683-2045	2	RESISTOR 200K 5% .25W FC TC=-800/+900	01121	CB2045
A13R19	0683-5105	5	RESISTOR 51 5% .25W FC TC=-400/+500	01121	CB5105
A13R21	0757-0453	1	RESISTOR 30.1K 1% .125W F TC=0+-100	24546	C4-1/8-T0-3012-F
A13R22	0698-4488	1	RESISTOR 26.7K 1% .125W F TC=0+-100	24546	C4-1/8-T0-2672-F
A13R23	2100-3308	3	RESISTOR-TRMR 5K 10% C SIDE-ADJ 17-TRN	32997	3006P-1-502
A13R24	0683-2025		RESISTOR 2K 5% .25W FC TC=-400/+700	01121	CB2025
A13R25	0698-8215	3	RESISTOR 54K .5% (P/O MATCHED SET R25,38,43)	28480	0698-8215
A13R26	0683-2025		RESISTOR 2K 5% .25W FC TC=-400/+700	01121	CB2025
A13R27	0683-1015		RESISTOR 100 5% .25W FC TC=-400/+500	01121	CB1015
A13R28	0683-2415	1	RESISTOR 240 5% .25W FC TC=-400/+600	01121	CB2415
A13R29	0683-2235		RESISTOR 22K 5% .25W FC TC=-400/+800	01121	CB2235
A13R31	0683-1035		RESISTOR 10K 5% .25W FC TC=-400/+700	01121	CB1035
A13R32	0683-5145		RESISTOR 510K 5% .25W FC TC=-800/+900	01121	CB5145
A13R33	0757-0442		RESISTOR 10K 1% .125W F TC=0+-100	24546	C4-1/8-T0-1002-F
A13R34	0683-1235		RESISTOR 12K 5% .25W FC TC=-400/+800	01121	CB1235
A13R35	0683-3025		RESISTOR 3K 5% .25W FC TC=-400/+700	01121	CB3025
A13R36	2100-3306		RESISTOR-TRMR 50K 10% C SIDE-ADJ 17-TRN	32997	3006P-1-503
A13R37	0683-4715		RESISTOR 470 5% .25W FC TC=-400/+600	01121	CB4715
A13R38	0698-8215		RESISTOR 487K .5% (P/O MATCHED SET R25, 38,43)	28480	0698-8215
A13R39	0698-4202		RESISTOR 8.87K 1% .125W F TC=0+-100	24546	C4-1/8-T0-8871-F
A13R41	0698-4202		RESISTOR 8.87K 1% .125W F TC=0+-100	24546	C4-1/8-T0-8871-F
A13R42	0698-4202		RESISTOR 8.87K 1% .125W F TC=0+-100	24546	C4-1/8-T0-8871-F
A13R43	0698-8215		RESISTOR 2M .5% (P/O MATCHED SET R25,38,43)	28480	0698-8215
A13R44	0698-8216	4	RESISTOR 20.2K .5% (P/O MATCHED SET R44, R45)	28480	0698-8216
A13R45	0698-8216		RESISTOR 2M .5% (P/O MATCHED SET R44, R45)	28480	0698-8216
A13R46	2100-3311	2	RESISTOR-TRMR 500 10% C SIDE-ADJ 17-TRN	32997	3006P-1-501
A13U1	1826-0059	3	IC LM 201A OP AMP	27014	LM201AH
A13U2	1826-0059		IC LM 201A OP AMP	27014	LM201AH
A13U3	1810-0250	1	IC, FINE LINE CHIP	28480	1810-0250
A13U4	1826-0059		IC LM 201A OP AMP	27014	LM201AH
A13U5	1826-0109		IC HA 2625 OP AMP	28480	1826-0109
A13U6	1820-0471		IC-DIGITAL SN7406N TTL HEX 1	01295	SN7406N
	1600-0515	1	STAMPING, BRS .020" THK	16365	080
	4040-0748	2	EXTRACTOR-PC 80 BLK POLYC .062-80-THKNS	28480	4040-0748
A14	03455-66514	1	P.C. ASSEMBLY, AD CONVERTER	28480	03455-66514
A14C1	0150-0084	3	CAPACITOR-FXD .1UF +80-20% 100WVDC CER	28480	0150-0084
A14C2	0160-4398		CAPACITOR-FXD .082UF +-10% 200WVDC POLYP	28480	0160-4398
A14C3	0140-0149	1	CAPACITOR-FXD 470PF +-5% 300WVDC MICA	72136	DM15F471J0300WV1CR
A14C4	0150-0084		CAPACITOR-FXD .1UF +80-20% 100WVDC CER	28480	0150-0084
A14C5	0150-0084		CAPACITOR-FXD .1UF +80-20% 100WVDC CER	28480	0150-0084
A14C6	0160-2204		CAPACITOR-FXD 100PF +-5% 300WVDC MICA	28480	0160-2204
A14CR1	1902-3237		DIODE-ZNR 20V 5% DO-7 PD=.4W TC=+.073%	04713	SZ 10939-269
A14CR2 ΔA, ΔC	1901-0040		DIODE-SWITCHING 30V 50MA 2NS DO-35	28480	1901-0040
A14CR3	1901-0040		DIODE-SWITCHING 30V 50MA 2NS DO-35	28480	1901-0040
A14CR4	1901-0376		DIODE-GEN PRP 35V 50MA DO-7	28480	1901-0376
A14CR5	1901-0376		DIODE-GEN PRP 35V 50MA DO-7	28480	1901-0376
A14CR6 ΔA, ΔC	1901-0040		DIODE-SWITCHING 30V 50MA 2NS DO-35	28480	1901-0040
A14CR7	1902-3237		DIODE-ZNR 20V 5% DO-7 PD=.4W TC=+.073%	04713	SZ 10939-269
A14CR8	1901-0040		DIODE-SWITCHING 30V 50MA 2NS DO-35	28480	1901-0040
A14CR9	1901-0040		DIODE-SWITCHING 30V 50MA 2NS DO-35	28480	1901-0040
A14CR10	1901-0040		DIODE-SWITCHING 30V 50MA 2NS DO-35	28480	1901-0040

ΔA SERIAL NUMBERS 1622A05231 AND ABOVE. NOTE (A8) ON SCHEMATIC 8.
ΔC SEE NOTE ON SCHEMATIC 8.

Table 6-3. Replaceable Parts (Cont'd)

Reference Designation	HP Part Number	Qty	Description	Mfr Code	Mfr Part Number
A14CR11	1901-0518		DIODE-SCHOTTKY	28480	1901-0518
A14CR12	1901-0040		DIODE-SWITCHING 30V 50MA 2NS DO-35	28480	1901-0040
A14Q1	1853-0020		TRANSISTOR PNP SI PD=300MW FT=150MHZ	28480	1853-0020
A14Q2	1853-0034	1	TRANSISTOR PNP SI TO-18 PD=360MW	28480	1853-0034
A14Q3	1855-0420		TRANSISTOR J-FET 2N4391 N-CHAN D-MODE	04713	2N4391
A14Q4	1855-0033	1	TRANSISTOR J-FET N-CHAN D-MODE TO-72 SI	28480	1855-0033
A14Q5	1855-0246	1	TRANSISTOR-JFET DUAL N-CHAN D-MODE TO-71	28480	1855-0246
A14Q6	1853-0020		TRANSISTOR PNP SI PD=300MW FT=150MHZ	28480	1853-0020
A14R1 ΔB	0683-1035	1	RESISTOR 10K 5% .25W FC TC=-400/+700	01607	CB1035
A14R2	0683-2025		RESISTOR 2K 5% .25W FC TC=-400/+700	01121	CB2025
A14R3	0698-3155		RESISTOR 4.64K 1% .125W F TC=0+-100	24546	C4-1/8-TO-4641-F
A14R4	0811-2577	2	RESISTOR 10K .1% .125W PWW TC=0+-2	14140	1274-1/16-A-1002-B
A14R5	0757-0436	1	RESISTOR 4.32K 1% .125W F TC=0+-100	24546	C4-1/8-TO-4321-F
A14R6	0757-0280		RESISTOR 1K 1% .125W F TC=0+-100	24546	C4-1/8-TO-1001-F
A14R7	0698-3226	1	RESISTOR 6.49K 1% .125W F TC=0+-100	24546	C4-1/8-TO-6491-F
A14R8	0757-0440	1	RESISTOR 7.5K 1% .125W F TC=0+-100	24546	C4-1/8-TO-7501-F
A14R9	0757-0462	1	RESISTOR 75K 1% .125W F TC=0+-100	24546	C4-1/8-TO-7502-F
A14R10	0757-0430	1	RESISTOR 2.21K 1% .125W F TC=0+-100	24546	C4-1/8-TO-2211-F
A14R11	0698-3511	1	RESISTOR 665 1% .125W F TC=0+-100	24546	C4-1/8-TO-665R-F
A14R12	0683-3025		RESISTOR 3K 5% .25W FC TC=-400/+700	01121	CB3025
A14R13*	0683-2265	1	RESISTOR 22M 5% .25W FC TC=-900/+1200	01121	CB2265
A14R14	0757-0442		RESISTOR 10K 1% .125W F TC=0+-100	24546	C4-1/8-TO-1002-F
A14R15	0811-3017	1	RESISTOR 19.8K 1% .125W PWW TC=0+-5	14140	1350-1/8-C-1982-F
A14R16	0757-0441	1	RESISTOR 8.25K 1% .125W F TC=0+-100	24546	C4-1/8-TO-8251-F
A14R17	0757-0465		RESISTOR 100K 1% .125W F TC=0+-100	24546	C4-1/8-TO-1003-F
A14R18 ΔB	0757-0273		RESISTOR 3.01K 1% .125W F TC=0+-100	03292	C4-1/8-TO-3011 -F
A14R19 ΔB	0698-4460	1	RESISTOR 649 1% .125W F TC=0+-100	03292	C4-1/8-TO-649R -F
A14R20 ΔB	0698-3226		RESISTOR 6.49K 1% .125W F TC=0+-100	03292	C4-1/8-TO-6491 -F
A14R21	0811-2577		RESISTOR 10K .1% .125W PWW TC=0+-2	14140	1274-1/16-A-1002-B
A14R22	0698-3155		RESISTOR 4.64K 1% .125W F TC=0+-100	24546	C4-1/8-TO-4641-F
A14R23	0683-8215	1	RESISTOR 820 5% .25W FC TC=-400/+600	01121	CB8215
A14R24 ΔB	0683-1035		RESISTOR 10K 5% .25W FC TC=-400/+700	01607	CB1035
A14R25 ΔB	0683-1035		RESISTOR 10K 5% .25W FC TC=-400/+700	01607	CB1035
A14R26	0698-3260	2	RESISTOR 464K 1% .125W F TC=0+-100	91637	CMF-55-1, T-1
A14R27	0698-8649	2	RESISTOR 1.28M .1% .25W F TC=0+-25	19701	MF52C-1
A14R28	0683-2735		RESISTOR 27K 5% .25W FC TC=-400/+800	01121	CB2735
A14R29	0683-3925	1	RESISTOR 3.9K 5% .25W FC TC=-400/+700	01121	CB3925
A14R30	0698-8649		RESISTOR 1.28M .1% .25W F TC=0+-25	19701	MF52C-1
A14R31	0698-3260		RESISTOR 464K 1% .125W F TC=0+-100	91637	CMF-55-1, T-1
A14R32	0698-3499	3	RESISTOR 40.2K 1% .125W F TC=0+-100	24546	C4-1/8-TO-4022-F
A14R33	0698-3499		RESISTOR 40.2K 1% .125W F TC=0+-100	24546	C4-1/8-TO-4022-F
A14R34	0683-1025	1	RESISTOR 1K 5% .25W FC TC=-400/+600	01121	CB1025
A14R35	0698-3499		RESISTOR 40.2K 1% .125W F TC=0+-100	24546	C4-1/8-TO-4022-F
A14R36	0683-2435	1	RESISTOR 24K 5% .25W FC TC=-400/+800	01121	CB2435
A14R37	0683-1035		RESISTOR 10K 5% .25W FC TC=-400/+700	01121	CB1035
A14R38	0683-3045	1	RESISTOR 300K 5% .25W FC TC=-800/+900	01121	CB3045
A14R39	0683-3025		RESISTOR 3K 5% .25W FC TC=-400/+700	01121	CB3025
A14R40	0757-0442		RESISTOR 10K 1% .125W F TC=0+-100	24546	C4-1/8-TO-1002-F
A14R41	0757-0442		RESISTOR 10K 1% .125W F TC=0+-100	24546	C4-1/8-TO-1002-F
A14R42	0683-4735	1	RESISTOR 47K 5% .25W FC TC=-400/+800	01121	CB4735
A14R43	0683-2035		RESISTOR 20K 5% .25W FC TC=-400/+800	01121	CB2035
A14R44 ΔA	0683-2055	3	RESISTOR 2M 5% .25W FC TC=-900/+1100	01607	CB2055
A14R45	0683-1065		RESISTOR 10M 5% .25W FC TC=-900/+1100	01121	CB1065
A14R46	0683-1065		RESISTOR 10M 5% .25W FC TC=-900/+1100	01121	CB1065
A14R47	0698-4475	1	RESISTOR 9.76K 1% .125W F TC=0+-100	03888	PME55-1/8-TO-9761-F
A14R48	0757-0407	1	RESISTOR 182K 1% .125W F TC=0+-100	03292	C4-1/8-TO-1823-F
A14U1	1906-0070	2	DIODE-ARRAY	28480	1906-0070
A14U2	1906-0070		DIODE-ARRAY	28480	1906-0070
A14U3 †	1826-0309	2	IC AD-518J OP AMP	24355	AD518J
A14U4	1826-0309		IC AD 518J OP AMP	24355	AD518J
A14U5	1820-0203	1	IC, AMPL, OPERATIONAL	15818	741CE009
A14U6	1826-0138	1	IC LM 339 COMPARATOR	27014	LM339N
	5040-6843	2	EXTRACTOR, P.C. BOARD	28480	5040-6843
	5000-9043	2	PIN:P.C. BOARD EXTRACTOR	28480	5000-9043

ΔA SEE NOTE ON SCHEMATIC 6.
ΔB SERIAL NUMBERS 1622A05231 AND ABOVE. SEE NOTE ON SCHEMATIC 6.

Table 6-3. Replaceable Parts (Cont'd)

Reference Designation	HP Part Number	C D	Qty	Description	Mfr Code	Mfr Part Number
A15	03455-66515		1	PC ASSEMBLY, AC RMS	28480	03455-66515
A15C1	0150-0121		9	CAPACITOR-FXD .1UF +80-20% 50WVDC CER	28480	0150-0121
A15C2	0170-0066		1	CAPACITOR-FXD .027 UF 200V	28480	0170-0066
A15C3	0170-0038		1	CAPACITOR-FXD .22 UF 200V	28480	0170-0038
A15C4	0160-3094		1	CAPACITOR-FXD .1UF +-10% 100WVDC CER	28480	0160-3094
A15C5	0160-3134			CAPACITOR-FXD .01UF +-10% 100WVDC CER	28480	0160-3134
A15C6	0160-2035		1	CAPACITOR-FXD 750PF +-5% 300WVDC MICA	28480	0160-2035
A15C7	0160-2204			CAPACITOR-FXD 100PF +-5% 300WVDC MICA	28480	0160-2204
A15C8	0160-0163			CAPACITOR-FXD .033 UF 200V	28480	0160-0163
A15C9	0160-3686		1	CAPACITOR-FXD .27 UF +-10% 50WVDC MET	28480	0160-3686
A15C11	0160-2264			CAPACITOR-FXD 20PF +-5% 500WVDC CER	28480	0160-2264
A15C12 ΔQ	0160-4084			CAPACITOR-FXD .1UF 50VDC	28480	0160-4084
A15C13 ΔQ	0160-2248			CAPACITOR-FXD 4.3 PF	28480	0160-2248
A15C14,C15	0180-0291			CAPACITOR FXD 1UF +-10% 35VDC TA	56289	150D105X9035A2
A15C16 ΔQ	0160-2264		1	CAPACITOR-FXD 20PF +-5% 500WVDC CER	28480	0160-2264
A15C17-19,C21	0150-0121			CAPACITOR-FXD .1UF +80-20% 50WVDC CER	28480	0150-0121
A15C22*				PADDING LIST		
	0160-2257			CAPACITOR-FXD 10PF +-5% 500WVDC	28480	0160-2257
	0160-2259			CAPACITOR-FXD 12PF +-5% 500WVDC	28480	0160-2259
	0160-2261			CAPACITOR-FXD 15PF +-5% 500WVDC	28480	0160-2261
A15C23,C24	0150-0121			CAPACITOR-FXD .1UF +80-20% 50WVDC CER	28480	0150-0121
A15C25	0160-3949			CAPACITOR-FXD 346PF +-1% 500WVDC PORC	28480	0160-3949
A15C26	0150-0121			CAPACITOR-FXD .1UF +80-20% 50WVDC CER	28480	0150-0121
A15C27	0160-3945			CAPACITOR-FXD 39PF +-1% 500WVDC PORC	28480	0160-3945
A15C28	0150-0121			CAPACITOR-FXD .1UF +80-20% 50WVDC CER	28480	0150-0121
A15C29,C30	0160-4480		2	CAPACITOR,FXD 10PF 100V	28480	0160-4480
A15C31	0160-3948		1	CAPACITOR-FXD 970PF +-1% 500WVDC PORC	28480	0160-3948
A15C32 ΔQ	0160-2150			CAPACITOR-FXD 37PF +-5% 300WVDC	28480	0160-2150
A15C33 ΔP	0160-3986			CAPACITOR-FXD .22UF +-10% 400VDC	28480	0160-3986
A15C34	0121-0436			CAPACITOR-V TRMR-AIR 2.4/24.5PF 350V	74970	189-509-125
A15C35 ΔQ	0160-0378		1	CAPACITOR-FXD 27PF 500WVDC	28480	0160-0378
A15C36-38 ΔA	0160-2055		3	CAPACITOR-FXD .01UF +80-20% 100VDC CER	28480	0160-2055
A15C40 ΔJ	0160-0128		1	CAPACITOR-FXD 2.2UF +-20% 500VDC CER	28480	0160-0128
A15C41 ΔQ	0160-0127		1	CAPACITOR-FXD 1UF 25V	28480	0160-0127
A15CR1,2,3	1901-0040			DIODE-SWITCHING 30V 50MA 2NS DO-35	28480	1901-0040
A15CR4,5 †	1901-0915			DIODE	28480	1901-0915
A15CR6	1901-0040		1	DIODE-SWITCHING 30V 50MA 2NS DO-35	28480	1901-0040
A15CR7	1901-0586		2	DIODE, GEN PRP 30V 25MA TO-72	28480	1901-0586
A15CR8,CR9	1902-3073			DIODE-ZNR 4.32V 5% DO-7 PD=4W TC=-.035%	04713	SZ 10939-77
A15CR11-CR13	1901-0040			DIODE-SWITCHING 30V 50MA 2NS DO-35	28480	1901-0040
A15K1,K3 ΔA	0490-0683			RELAY-REED 1A 100MA 1000VDC 5VDC-COIL	28480	0490-0683
A15K2,K4	0490-0683			RELAY-REED 1A 100MA 1000VDC 5VDC-COIL	28480	0490-0683
A15Q1	1854-0071			TRANSISTOR NPN SI PD=300MW FT=200MHZ	28480	1854-0071
A15Q2-Q4	1855-0420			TRANSISTOR J-FET 2N4391 N-CHAN D-MODE	04713	2N4391
A15Q5	1855-0062		1	TRANSISTOR J-FET N-CHAN D-MODE SI	28480	1855-0062
A15Q6	1854-0071			TRANSISTOR NPN DI PD=300MW FT=200MHZ	28480	1854-0071
A15Q7	1853-0020			TRANSISTOR PNP SI PD=300MW FT=150MHZ	28480	1853-0020
A15Q8	1855-0420			TRANSISTOR J-FET 2N4391 N-CHAN D-MODE	04713	2N4391
A15Q9,Q11	1854-0753		2	TRANSISTOR, AD818	28480	1854-0753
A15Q12	1853-0020			TRANSISTOR PNP SI PD=300MW FT=150MHZ	28480	1853-0020
A15Q13	1854-0071			TRANSISTOR NPN SI PD=300MW FT=200MHZ	28480	1854-0071
A15Q14	1853-0089		1	TRANSISTOR PNP 2N4917 SI PD=200MW	07263	2N4917
A15Q15	1854-0215		1	TRANSISTOR NPN SI PD=350MW FT=300MHZ	04713	SPS3611
A15Q16	1854-0071			TRANSISTOR NPN SI PD=300MW FT=200MHZ	28480	1854-0071
A15Q17	1853-0020			TRANSISTOR PNP SI PD=300MW FT=150MHZ	28480	1853-0020
A15Q18	1855-0081		1	TRANSISTOR J-FET 2N5245 N-CHAN D-MODE SI	01295	2N5245
A15Q19,Q20	1855-0420			TRANSISTOR J-FET 2N4391 N-CHAN D-MODE	04713	2N4391
A15R1	0683-1035			RESISTOR 10K 5% .25W FC TC=-400/+700	01121	CB1035
A15R2	0683-2235			RESISTOR 22K 5% .25W FC TC=-400/+800	01121	CB2235
A15R3	0683-5145			RESISTOR 510K 5% .25W FC TC=-800/+900	01121	CB5145
A15R4	0683-2235			RESISTOR 22K 5% .25W FC TC=-400/+800	01121	CB2235
A15R5	0683-5145			RESISTOR 510K 5% .25W FC TC=-800/+900	01121	CB5145
A15R6*				PADDING LIST		
	0698-4470			RESISTOR 6.98K 1% .125W F	24546	C4-1/8-TO-6891-F
	0757-0444			RESISTOR 12.1K 1% .125W F	24546	C4-1/8-TO-1212-F
	0698-4308			RESISTOR 16.9K 1% .125W F	24546	C4-1/8-TO-1692-F
A15R7	0757-0449		1	RESISTOR 20K 1% .125W F TC=0+-100	03292	C4-1/8-TO-649R-F

ΔA SEE NOTE ON SCHEMATIC 3.
ΔJ SEE NOTE ON SCHEMATIC 3.
ΔP SEE NOTE ON SCHEMATIC 3.
ΔQ SEE NOTE ON SCHEMATIC 3.

See introduction to this section for ordering information
*Indicates factory selected value

Table 6-3. Replaceable Parts (Cont'd)

Reference Designation	HP Part Number	C D	Qty	Description	Mfr Code	Mfr Part Number
A15R8	0698-8692		1	RESISTOR 160K 1% .125W F TC=-+-25	07716	CEA-993-N330
A15R9	0698-3262		1	RESISTOR 40.2 1% .125W F TC=0+-100	24546	C4-1/8-TO-4022-F
A15R11	0698-3159		1	RESISTOR 26.1K 1% .125W F TC=0+-100	24546	C4-1/8-TO-2612-F
A15R12	0683-2455		1	RESISTOR 2.4M 5% .25W FC TC=-900/+1100	01121	CB2455
A15R13	0698-3456		1	RESISTOR 287K 1% .125W F TC=0+-100	24546	C4-1/8-TO-2873-F
A15R14	0683-1035			RESISTOR 10K 5% .25W FC TC=-400/+700	01121	CB1035
A15R15	0683-2235			RESISTOR 22K 5% .25W FC TC=-400/+800	01121	CB2235
A15R16	2100-3161			RESISTOR TRMR 20K 10% C SIDE-ADJ 17-TRN	32997	3006P-1-203
A15R17 ΔC	2100-3056			RESISTOR-TRMR 5K 10% C SIDE-ADJ 17-TRN	03744	3006P-1-502
A15R18 ΔL, ΔN	0698-8350			RESISTOR 732K 1% .125W F TC=0+-100	03292	MC5C-1/8-TO-7323-F
A15R19	0757-0417			RESISTOR 562 1% .125W F TC=0+-100	24546	C4-1/8-TO-562R-F
A15R21*				PADDING LIST		
	0683-1845			RESISTOR 180K 5% .25W FC	01121	CB1845
	0683-2245			RESISTOR 220K 5% .25W FC	01121	CB2245
	0683-2445			RESISTOR 240K 5% .25W FC	01121	CB2445
	0683-3045			RESISTOR 300K 5% .25W FC	01121	CB3045
	0683-3645			RESISTOR 360K 5% .25W FC	01121	CB3645
	0683-5145			RESISTOR 510K 5% .25W FC	01121	CB5145
	0683-7545			RESISTOR 750K 5% .25W FC	01121	CB7545
	0683-1655			RESISTOR 1.5M 5% .25W FC	01121	CB1555
A15R22	0757-0401		1	RESISTOR 100 1% .125W F TC=0+-100	24546	C4-1/8-TO-100R-F
A15R23 ΔC	0683-1045			RESISTOR 100K 5% .25W FC TC=-400/+800	01607	CB1045
A15R24 ΔC	0683-2235			RESISTOR 22K 5% .25W FC TC=-400/+800	01121	CB2235
A15R25	0698-7082		2	RESISTOR 100K .1% .125W F TC=0+-25	03292	NE55
A15R26	0698-4429			RESISTOR 1.87K 1% .125W F TC=0+-100	24546	C4-1/8-TO-1871-F
A15R27	0698-3279			RESISTOR 4.99K 1% .125W F TC=0+-100	24546	C4-1/8-TO-4991-D
A15R29	2100-3161			RESISTOR-TRMR 20K 10% C SIDE-ADJ 17-TRN	32997	3006P-1-203
A15R31 ΔL,ΔN,ΔQ	0757-0487			RESISTOR 825K 1% .125W F TC=0+-100	03292	MC5C-1/8-TO-8253-F
A15R32	0698-0084		1	RESISTOR 2.15K 1% .125W F TC=0+-100	24546	C4-1/8-TO-2151-F
A15R33	0698-3492		1	RESISTOR 2.67K 1% .125W F TC=0+-100	24546	C4-1/8-TO-2671-F
A15R34	0757-0417			RESISTOR 562 1% .125W F TC=0+-100	24546	C4-1/8-TO-562R-F
A15R35	0757-0280			RESISTOR 1K 1% .125W F TC=0+-100	24546	C4=1/8-TO-1001-F
A15R36	0698-4460		1	RESISTOR 649 1% .125W F TC=0+-100	03292	C4-1/8-TO-649R-F
A15R37	0683-5105			RESISTOR 51 5% .25W FC TC=-400/+500	01121	CB5105
A15R38,R39	0683-5105			RESISTOR 51 5% .25W FC TC=-400/+500	01121	CB5105
A15R41	0757-0413		1	RESISTOR 392 1% .125W F TC=0+-100	24546	C4-1/8-TO-392R-F
A15R42	0698-4429			RESISTOR 1.87K 1% .125W F TC=0+-100	24546	C4-1/8-TO-1871-F
A15R43	0698-4478		1	RESISTOR 10.7K 1% .125W F TC=0+-100	24546	C4-1/8-TO-1072-D
A15R44	0683-5105			RESISTOR 51 5% .25W FC TC=-400/+500	01121	CB5105
A15R45	0698-4429			RESISTOR 1.87K 1% .125W F TC=0+-100	24546	C4-1/8-TO-1871-F
A15R46 ΔQ	0698-4419		1	RESISTOR 210 1% .125W F TC=0+-100	24546	C4-1/8-TO-210R-F
A15R47 ΔQ	0698-4427		1	RESISTOR 1.65 1% .125W F TC=0+-100	24546	C4-1/8-TO-1651-F
A15R48 ΔQ	0757-0442			RESISTOR 10K 1% .125W F TC=0+-100	24546	C4-1/8-TO-1001-F
A15R49	0698-3279			RESISTOR 4.99K 1% .125W F TC=0+-100	24546	C4-1/8-TO-4991-F
A15R51 ΔC,ΔQ	2100-3122		1	RESISTOR-TRMR 100 10% C SIDE	03744	3006P-1-101
A15R52 ΔC	0698-6630		1	RESISTOR 20K .1% .125W F TC=0+-25	03292	NE55
A15R53 ΔC	0698-6360			RESISTOR 10K .1% .125W F TC=0+-25	03292	NE55
A15R54	0698-3431		1	RESISTOR 23.7 1% .125W F TC=0+-100	03888	PME55-1/8-TO-23R7-F
A15R55	0698-6320			RESISTOR 5K .1% .125W F TC=0+-25	03888	PME55-1/8-T9-5001-B
A15R56	2100-3161			RESISTOR-TRMR 20K 10% C SIDE-ADJ 17-TRN	32997	3006P-1-203
A15R57,R58	0683-1505			RESISTOR 15 5% .25W FC TC=-400/+500	01121	CB1505
A15R59 ΔA	0683-1045		2	RESISTOR 100K 5% .25W FC TC	01607	CB1045
A15R61	0683-1035			RESISTOR 10K 5% .25W FC TC=-400/+700	01121	CB1035
A15R62	0757-0417			RESISTOR 562 1% .125W F TC=0+-100	24546	C4-1/8-TO-562R-F
A15R63	0757-0487			RESISTOR 825K 1% .125W F TC=0+-100	24546	NA4
A15R64	0698-6320			RESISTOR 5K .1% .125W F TC=0+-25	03888	PME55-1/8-T9-5001-B
A15R65	2100-3161			RESISTOR-TRMR 20K 10% C SIDE-ADJ 17-TRN	32997	3006P-1-203
A15R66 ΔO	0683-1635			RESISTOR 16K 5% .25W FC TC=-400/+800	01607	CB1635
A15R67 ΔO	0683-1335		1	RESISTOR 13K 5% .25W FC TC=-400/+800	01607	CB1335
A15R68	0683-1035			RESISTOR 10K 5% .25W FC TC=-400/+700	01121	CB1035
A15R69	0683-1035			RESISTOR 10K 5% .25W FC TC=-400/+700	01121	CB1035
A15R71	0757-		1	RESISTOR 332		
A15R72 ΔB	2100-3122		2	RESISTOR-TRMR 100 10% C TOP	03744	3006P-1-101
A15R73	2100-3056			RESISTOR-TRMR 5K 10% C SIDE-ADJ 17-TRN	01885	43P502
A15R74	2100-3306			RESISTOR-TRMR 50K 10% C SIDE-ADJ 17-TRN	32997	3006P-1-503
A15R75 ΔB	2100-3154		1	RESISTOR-TRMR 1K 10% C SIDE-ADJ 17-TRN	03744	3006P-1-102
A15R76	0698-8782			RESISTOR 220K .5% (P/O MATCHED SET R76,86, 91)	28480	0698-8782
A15R77	0757-0487		5	RESISTOR 825K 1% .125W F TC=0+-100	24546	NA4
A15R78 ΔG	0757-0280			RESISTOR 1K 1% .125W F TC=0+-100	03292	C4-1/8-TO-1001-F
A15R79	0683-1505			RESISTOR 15 5% .25W FC TC=-400/+500	01121	CB1505

ΔA SEE NOTE ON SCHEMATIC 3.
ΔB SEE NOTE ON SCHEMATIC 3.
ΔC SEE NOTE ON SCHEMATIC 3.
ΔG SEE NOTE ON SCHEMATIC 3.
ΔL, ΔN SEE NOTE ON SCHEMATIC 3.
ΔO SEE NOTE ON SCHEMATIC 3.
ΔQ SEE NOTE ON SCHEMATIC 3.

See introduction to this section for ordering information
*Indicates factory selected value

Table 6-3. Replaceable Parts (Cont'd)

Reference Designation	HP Part Number	C D	Qty	Description	Mfr Code	Mfr Part Number
A15R81 ΔM,ΔQ	0757-0438		1	RESISTOR 5.11K 1% .1W F TC=0+-10	28480	0757-0438
A15R82 ΔM	0698-8963		1	RESISTOR 16.9K 1% .1W F TC=0+-10	28480	0698-8963
A15R83 ΔM	0698-8965		5	RESISTOR 1.87K 1% .1W F TC=0+-10	28480	0698-8965
A15R84	0757-0433			RESISTOR 3.32 K 1% .125W F TC=0+-100	24546	C4-1/8-TO-3321-F
A15R85 ΔM	0698-8966			RESISTOR 634 1% .1W F TC=0+-10	28480	0698-8966
A15R86	0698-8782			RESISTOR 1.98M .5% (P/O MATCHED SET R76, 86,91)	28480	0698-8782
A15R88	0683-1505		4	RESISTOR 15 5% .25W FC TC=-400/+500	01121	CB1505
A15R89* ΔA				PADDING LIST		
	0698-4308			RESISTOR 16.9K 1% .125W F TC=0+-100	03292	C4-1/8-TO-1692-F
	0698-3136			RESISTOR 17.8K 1% .125W F TC=-+-100	03292	C4-1/8-TO-1782-F
	0757-0448			RESISTOR 18.2K 1% .125W TC=0+-100	03292	C4-1/8-TO-1882-F
	0698-4483			RESISTOR 18.7K 1% .125W F TC=0+-100	03292	C4-1/8-TO-1872-F
	0698-4484			RESISTOR 19.1K 1% .125W F TC=0+-100	03292	C4-1/8-TO-1912-F
	0757-0449			RESISTOR 20K 1% .125W F TC=0+-100	03292	C4-1/8-TO-2002-F
A15R91	0698-8782		3	RESISTOR SET, MATCHED 2M .5% (P/O MATCHED SET R76,R86,R91)	28480	0698-8782
A15R92	0698-8216			RESISTOR 2M .5%(P/O MATCHED SET R92,R93)	28480	0698-8216
A15R93	0698-8216			RESISTOR 20.2K .5%(P/O MATCHED SET R92,R93)	28480	0698-8216
A15R94	2100-3311			RESISTOR-TRMR 500 10% C SIDE-ADJ 17-TRN	32997	3006P-1-501- 000-F
A15R95	0757-3557		1	RESISTOR 806 1% .125W F TC=0+-100	28480	0757-3557
A15R96 ΔA	0698-5540		1	RESISTOR 1.1M 5% .25W FC TC	01607	CB1155
A15R97 ΔA	0683-1045			RESISTOR 100K 5% .25W FC TC	01607	CB1045
A15R100 ΔQ	0757-0346		1	RESISTOR 10 1% .125W F TC=0+-100	32997	C4-1/8-TO-102
A15R102 ΔQ	0698-4462		1	RESISTOR 768 1% .125W F TC=0+-10	32997	C4-1/8-TO-768
A15U1	1826-0340		1	IC, OP AMPL. LF356	28480	1826-0340
A15U2	1820-0478		1	IC LM 308 OP AMP	27014	LM308H
A15U3,U4 ΔH †	03455-62502		2	IC 357 OP AMP TO-99	28480	03455-62502
A15U5	1820-0471			IC-DIGITAL SN7406N TTL HEX1	01295	SN7406N
A15U6	1826-0357		1	IC LF347H OP AMP	27014	LF357H
	4040-0748		2	EXTRACTOR-PC BD BLK PLOYC .062-BD THKNS	28480	4040-0748
	1205-0090		1	HEAT SINK-SEMICONDUCTOR	28480	1205-0090
	1205-0002		1	HEAT SINK TO-5/TO-39-PKG	28480	1205-0002
A20Δ	11177-69501		1	ASSEMBLY, REFERENCE NOT FIELD REPAIRABLE ORDER REPLACEMENT ASSEMBLY ACCESSORY NO. 11177B		

ΔA SEE NOTE ON SCHEMATIC 3.
ΔH SEE NOTE ON SCHEMATIC 3.
ΔM SEE NOTE ON SCHEMATIC 3.
ΔQ SEE NOTE ON SCHEMATIC 3.
Δ SEE NOTE ON SCHEMATIC 6.

See introduction to this section for ordering information
*Indicates factory selected value

Table 6-3. Replaceable Parts (Cont'd)

Reference Designation	HP Part Number	C D	Qty	Description	Mfr Code	Mfr Part Number
				CHASSIS MOUNTED PARTS		
B1	3160-0266		1	FAN-TBAX DCV	28480	3160-0266
	3150-0300		1	FILTER, AIR	28480	3150-0300
C1-C6	0180-0291			CAPACITOR-FXD 1UF +-10% 35VDC TA	56289	150D105X9035A2
CR1	1990-0547			LED-VISIBLE LUM-INT=2MCD IF=20MA-MAX	28480	1990-0547
F1	2110-0201		1	FUSE .25A 250V SLO-BLO 220/240V OPERATION	75915	313.250S
	2110-0012		1	FUSE .5A 250V FAST-BLO 100/120V OPERATION	04703	312.500
J1	5061-1131 ΔB		2	TERM ASSEMBLY, REAR INPUT	28480	5061-1131
J2	1250-0083		1	CONNECTOR-RF BNC FEM SGL-HOLE-FR 50-OHM	24931	28JR-130-1
J3	1251-3283		1	CONNECTOR; 24-CONT; FEM; MICRORIBBON	28480	1251-3283
	0380-0643		1	STANDOFF, LG STUDMOUNT (METRIC THREAD)	0046A	OBD#
J4	9100-3910		1	FILTER-LINE	28480	9100-3910
J5	5060-7454			TERM ASSEMBLY, FRONT INPUT	28480	5060-7454
P1	1251-3201		1	CONNECTOR 3-PIN F POST TYPE	27264	09-50-7031
P2	1251-3957			CONNECTOR 10-PIN F POST TYPE	27264	22-01-2101
P3	1251-4312		1	CONNECTOR 18-PIN F POST TYPE	27264	22-01-2181
	1251-3476		17	CONTACT-CONN U/S POST TYPE FEM CRP(P/O P3)	28480	1251-3476
P4	1251-3277		1	CONNECTOR 4-PIN F POST TYPE	27264	09-50-7041
P5	1251-3275			CONNECTOR 6-PIN F POST TYPE	27264	09-50-7061
P6	1251-3275		2	CONNECTOR 6-PIN F POST TYPE	27264	09-50-7061
S1	3100-3380		1	*SWITCH, ROTARY INPUT SELECT	28480	3100-3380
	0370-1103		1	KNOB	28480	0370-1103
	3030-0007		1	SCREW-SET 4-40 .125-IN-LG	28480	3030-0007
S2,S3	3101-0961		2	SWITCH-SL SPDT-NS MINTR .5A 125VAC/DC PC	79727	G-124-0013
S4	3101-2042		2	SWITCH-SL DPDT-NS STD 2A 250VAC SLDR LUG	28480	3101-2042
S5	3101-2042			SWITCH-SL DPDT-NS STD 2A 250VAC SLDR LUG	28480	3101-2042
S6	3101-2216		1	SWITCH-PB DPDT 4A 250VAC	28480	3101-2216
	5040-7023		1	PUSH ROD	28480	5040-7023
S7	3101-1299		1	SWITCH-PB DPDT ALTNG .45A 115VAC PC	28480	3101-1299
	0370-0683		1	PUSHBUTTON, OLIVE BLACK	28480	0370-0683
T1	9100-0680		1	TRANSFORMER, POWER	28480	9100-0680
U1	1820-0430		1	IC LM 309 V RGLTR	27014	LM309K
	0340-0580		1	INSULATOR-XSTR RUBBER RED	8G464	7403-10-02
	1200-0456		1	SOCKET-XSTR 2-CONT TO-3-PKG	28480	1200-0456
U2	1826-0181		1	IC LM 323 V RGLTR	27014	LM323K
U3	1826-0117		1	IC 7812C V RGLTR	07263	7812KC
	1200-0479		2	SOCKET-XSTR 2-CONT TO-3 SLDR-TUR	91833	4601
W1	03455-61603		1	CABLE ASSEMBLY, VOLTS	28480	03455-61603
W2	03455-61604		1	CABLE ASSEMBLY, OHM	28480	03455-61604
W3	03455-61606		1	CABLE ASSEMBLY, HP-IB (INCLUDES J3 AND P3)	28480	03455-61606
W5	03455-61605		1	CABLE ASSEMBLY, POWER	28480	03455-61605
XF1	2110-0470		1	FUSEHOLDER-EXTR POST 20A 200V UL/IEC	75915	345003-010
	5041-0309 Δ		2	KEY CAP-UNL PTYGRY	28480	5041-0309
	5041-0139		1	KEY CAP-UNL MG (OBS)	28480	5041-0139
	5041-0318 Δ		21	KEY CAP-L PTYGRY	28480	5041-0318
	5041-0144		1	KEY CAP-L MOSGRY	28480	5041-0144
	5041-0267 ΔA		1	KEY-CAP UNL	28480	5041-0267
	5041-0450		2	KEY CAP-L SEABLU	28480	5041-0450
	5040-6897		1	LENS, LED	28480	5040-6897
	5041-0375 ΔA		3	KEY CAP-UNL	28480	5041-0375
	5040-6898		11	LITE PIPE	28480	5040-6898
	7120-6410		1	WARNING LABEL: 50-60 HZ SELECTION	28480	7120-6410
	7120-5911		1	WARNING LABEL: HP-IB	28480	7120-5911

Δ SERIAL NUMBERS 1622A00411 AND ABOVE. REPLACES PARTS 5041-0139 AND 5041-0144.
ΔA SERIAL NUMBERS 1622A02436 AND ABOVE. REPLACES 03455-04303.
ΔB SERIAL NUMBERS 1622A05631 AND ABOVE. REPLACES PART 5060-7454.

See introduction to this section for ordering information
*Indicates factory selected value

Table 6-3. Replaceable Parts (Cont'd)

Reference Designation	HP Part Number	C D	Qty	Description	Mfr Code	Mfr Part Number
				MECHANICAL PARTS		
MP1	5020-8801		1	*FRONT FRAME	28480	5020-8801
MP2	5020-8832		2	SIDE STRUTS	28480	5020-8832
MP3	5020-8802		1	*REAR FRAME	28480	5020-8802
MP4	5060-9835		1	TOP COVER	28480	5060-9835
MP5	5060-9847		1	BOTTOM COVER	28480	5060-9847
MP6	5060-9876		2	*SIDE COVER ASSEMBLY	28480	5060-9876
MP7	5060-9804		2	STRAP HANDLE, 18"	28480	5060-9804
MP8	5040-7219		2	STRAP HANDLE, CAP, FRONT	28480	5040-7219
MP9	5040-7220		2	STRAP HANDLE, CAP, REAR	28480	5040-7220
MP10	5040-7201		4	FOOT	28480	5040-7201
MP11	1460-1345		1	WIREFORM 1.34-W 3-LG SST	28480	1460-1345
MP12	5001-0438		1	TRIM STRIP	28480	5001-0438
MP13	5040-7202		1	TRIM, TOP	28480	5040-7202
MP14 ΔA	03455-04303		1	PANEL, FRONT, DRESS REV. F	28480	03455-04303
MP15	03455-00204		1	SUB-PANEL, FRONT	28480	03455-00204
MP16	4114-0641		1	*WINDOW DISPLAY	28480	4114-0641
MP17	03455-00401		1	GUARD ASSEMBLY	28480	03455-00401
MP18 ΔA	03455-00104		1	GUARD, MAIN	28480	03455-00104
	0403-0141		2	GUIDE-PC BD BLK POLYC .062-BD-THKNS	28480	0403-0141
	0403-0152		2	GUIDE-PC BD BLK POLYC .062-BD-THKNS 1-LG	28480	0403-0152
	1600-0574		1	*LOCKING STRAP	28480	1600-0574
MP19 ΔB	03455-00105		1	GUARD, SIDE	28480	03455-00105
	0403-0152			GUIDE-PC BD BLK POLYC .062-BD-THKNS 1-LG	28480	0403-0152
MP20	03455-00603		1	SHIELD, A.C. CONVERTER	28480	03455-00603
MP21	03455-01203		1	BRACKET, FT TERM	28480	03455-01203
MP22	03455-04107		1	COVER, VOLTAGE REGULATOR	28480	03455-04107
MP23	03455-01201		1	BRACKET, REFERENCE	28480	03455-01201
	0403-0141			GUIDE-PC BD BLK POLYC .062-BD-THKNS	28480	0403-0141
MP24	03455-00602		1	SHIELD, LT ISOLATOR	28480	03455-00602
MP25	03455-04102		1	COVER, BOTTOM GD	28480	03455-04102
MP26	03455-04101		1	COVER, TOP GD (AVERAGE AC CONVERTER)	28480	03455-04101
MP26	03455-04108		1	COVER, TOP GUARD (RMS AC CONVERTER)	28480	03455-04108
	03455-04106		1	COVER, AC CAL	28480	03455-04106
MP27	03455-01204		1	MOUNTING BRACKET, OUTGD	28480	03455-01204
MP28	03455-01101		1	HEAT SINK	28480	03455-01101
MP29	03455-00103		1	GUSSET	28480	03455-00103
MP30	5040-8081		4	INSULATOR, SLIDE	28480	5040-8081
MP31	03455-04301		1	PLATE, SLIDE	28480	03455-04301
MP32	03455-00601		1	COVER, LINE	28480	03455-00601
MP33	03455-01202		1	BRACKET, TRANSFORMER	28480	03455-01202
MP34	03455-00301		1	PANEL ASSEMBLY, REAR	28480	03455-00301
MP35	03455-04103		1	DOOR, REFERENCE	28480	03455-04103
	2360-0113		1	FASTENER-CPTVE SCR ASSY PANEL THKNS	28480	2360-0113

ΔA FOR SERIAL NUMBERS 1622A07686 AND ABOVE. REPLACES PART 03455-00101.
ΔB FOR SERIAL NUMBERS 1622A07686 AND ABOVE. REPLACES PART 03455-00102.

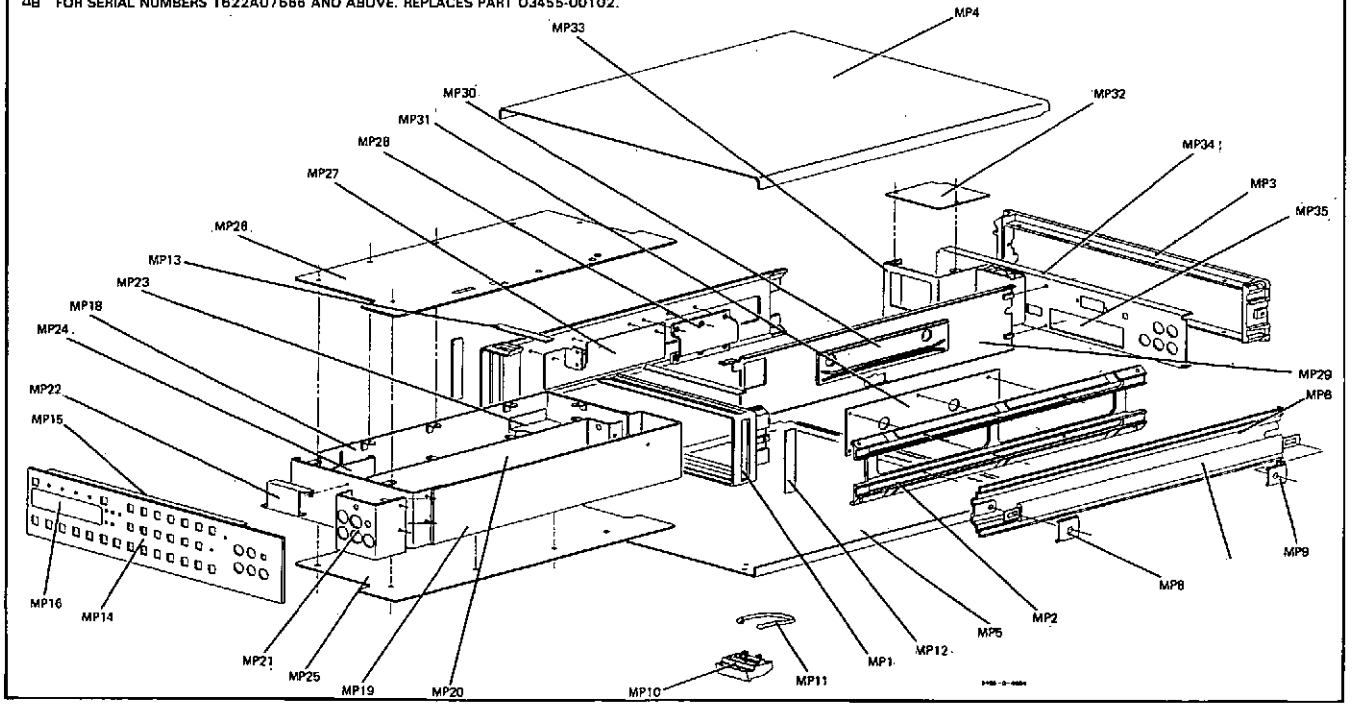

See introduction to this section for ordering information
*Indicates factory selected value

SECTION VII
MANUAL CHANGES

7-1. INTRODUCTION.

7-2. This section of the manual normally contains information necessary to adapt this manual to instruments for which the content does not directly apply. Since, at this printing, the manual **does** apply directly to instruments having serial numbers listed on the title page, no change information is given here.

SECTION VIII
SERVICE

8-1. INTRODUCTION.

8-2. This section contains theory of operation, trouble-shooting procedures, safety considerations, and general service information for the Model 3455A Digital Voltmeter.

8-3. SAFETY CONSIDERATIONS.

8-4. Although this instrument has been designed in accordance with international safety standards, this manual contains information, cautions, and warnings which must be followed to ensure safe operation and to maintain the instrument in safe operating condition. Service and adjustments should be performed only by qualified service personnel.

8-5. Any adjustment, maintenance, and repair of the opened instrument while any power or voltage is applied should be avoided as much as possible, and, when inevitable, should be carried out only by a skilled person who is aware of the hazard involved.

WARNING

Any interruption of the protective grounding conductor (inside or outside the instrument) or disconnection of the protective earth terminal is likely to make the instrument dangerous. Intentional interruption of the protective grounding conductor is strictly prohibited.

8-6. It is possible for capacitors inside the instrument to still be charged even if the instrument has been disconnected from its power sources.

8-7. Be certain that only fuses with the required current rating and of the specified typed (normal blow, time delay, etc.) are used for replacement. The use of repaired fuses and the short-circuiting of fuse holders must be avoided.

WARNING

The service information presented in this manual is normally used with the protective covers removed and power applied to the instrument. Energy available at many points may, if contacted, result in personal injury.

8-8. RECOMMENDED TEST EQUIPMENT.

8-9. Test equipment required to maintain the Digital Voltmeter is listed in Table 1-3. Equipment other than that listed may be used if it meets the listed critical specifications.

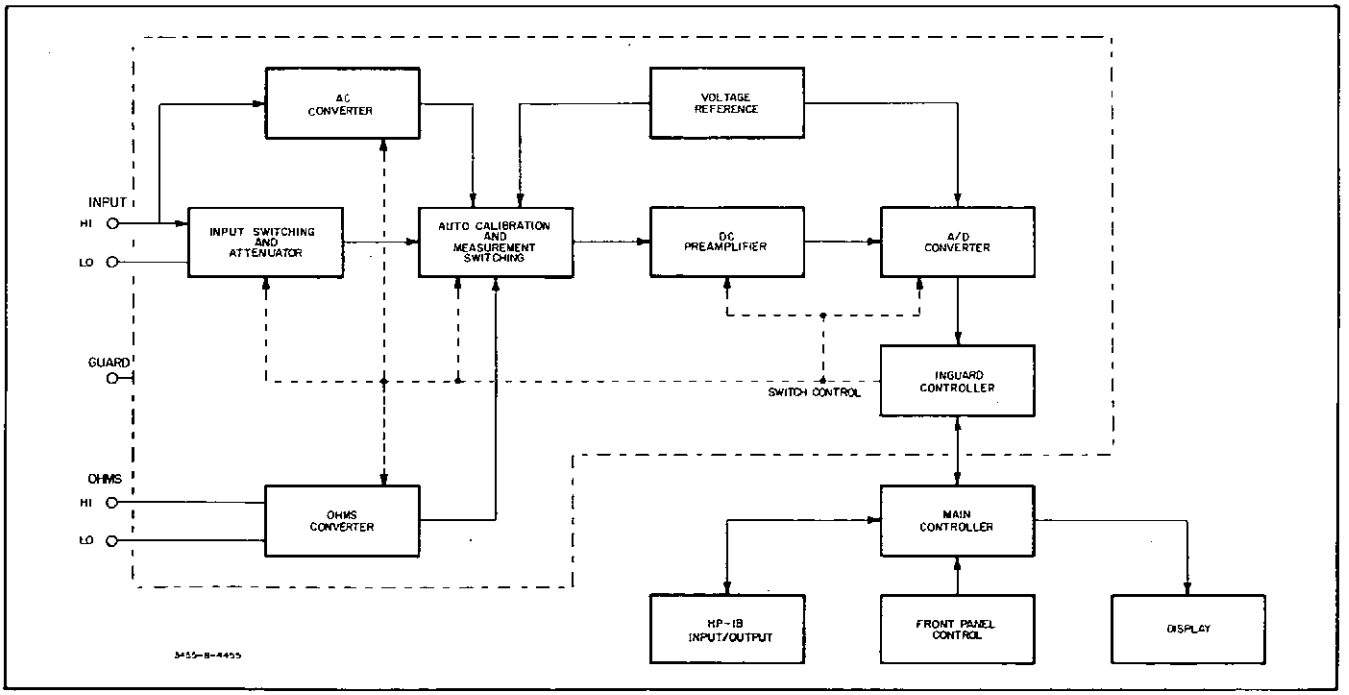

Figure 8-1. Function Block Diagram.

THEORY OF OPERATION

8-10. INTRODUCTION.

8-11. The following paragraphs contain both a general and detailed description of the methods and circuits used in the Model 3455A Multimeter. The general description explains the basic purpose of each block of the *functional* block diagram shown in Figure 8-1. The detailed *description* describes the methods and pertinent circuitry used to accomplish the function of each block of the detailed block diagram.

8-12. INPUT SWITCHING AND DC ATTENUATOR.

8-13. General.

8-14. The front or rear input terminals of the 3455A are selected by a two-section rotary switch located on the rear panel of the instrument. Reed relays are used to perform all internal input switching where voltages greater than 17 volts may be encountered. All other input switching is done with FET switches.

8-15. Detailed Description.

8-16. Refer to Figure 8-2, Simplified Input Switching Diagram. The front or rear inputs for "Volts", "Ohms" and "Guard" are selected by rear panel switch S1. Relays K3 and K9 connect the Ohms Converter to the "Ohms Signal" terminals. Relays K2 and K4 are used to convert the Multimeter from 4-wire to 2-wire ohms measurement capability. The "Input" terminals are connected to the dc preamplifier input on the .1 V dc through 10 V dc and all "Ohms" ranges by relay K1 and FET switch Q1. Relay K5 connects the input to the operational attenuator on the 100 and 1000 V dc ranges. Output of the Attenuator is connected to the input of the dc preamplifier by FET switch Q15 on the 100 V dc range and by FET switch Q16 on the 1000 V dc range. The AC Converter output is connected to the dc preamp input by FET switch Q3.

8-17. Operational Attenuator.

8-18. The Operational Attenuator provides a fixed attenuation of 10-to-1 on the 100 V dc range or 100-to-1 on the 1000 V dc range. Figure 8-3 shows a simplified diagram of the attenuator. The circuit operates as a conventional operational amplifier with fractional gains of .1 and .01. A gain of 1 is selected by FET switch Q38 when the attenuator is not in use. The amplifier input is protected from overload by diodes CR27 and CR28. Output of the amplifier is limited to approximately plus or minus 17 V dc by protection diodes CR29 through CR31.

8-19. AUTO CALIBRATION–DC VOLTAGE.

8-20. General.

8-21. The purpose of the Auto Calibration sequence is to eliminate offset and gain errors which may be present in the

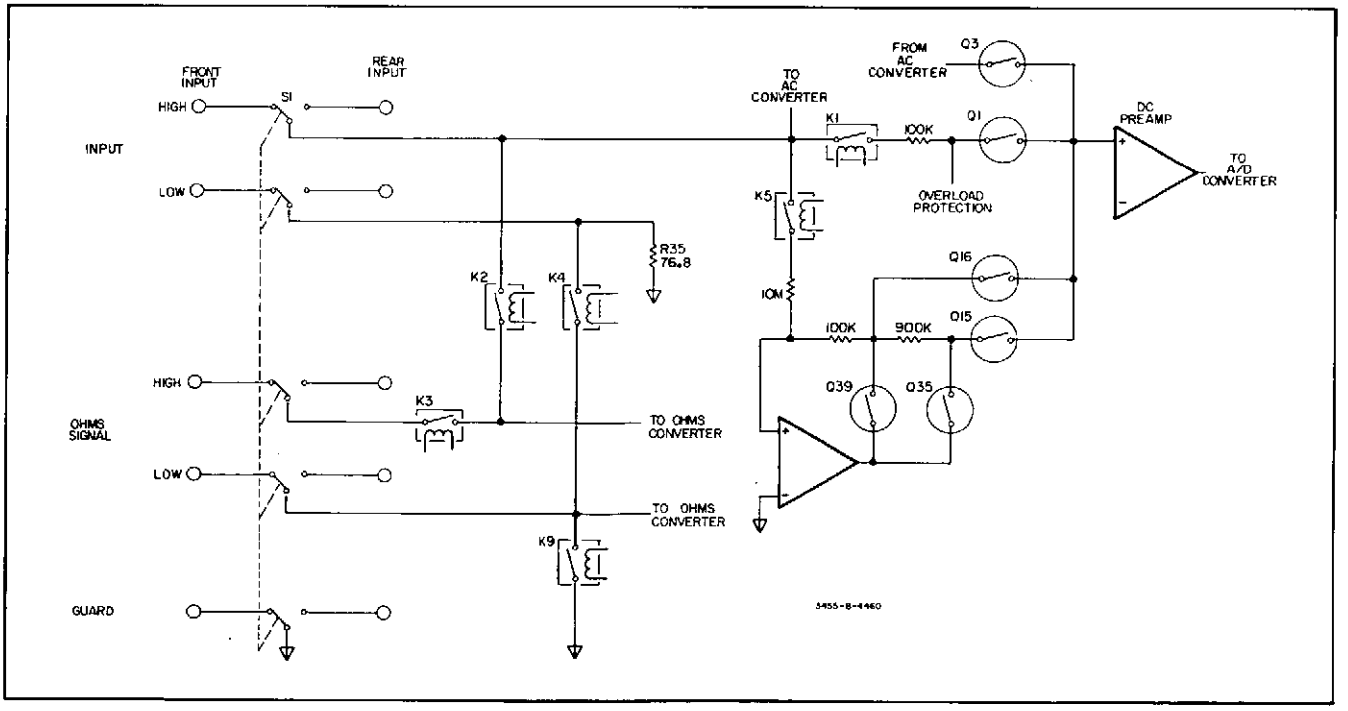

Figure 8-2. Simplified Input Switching Diagram.

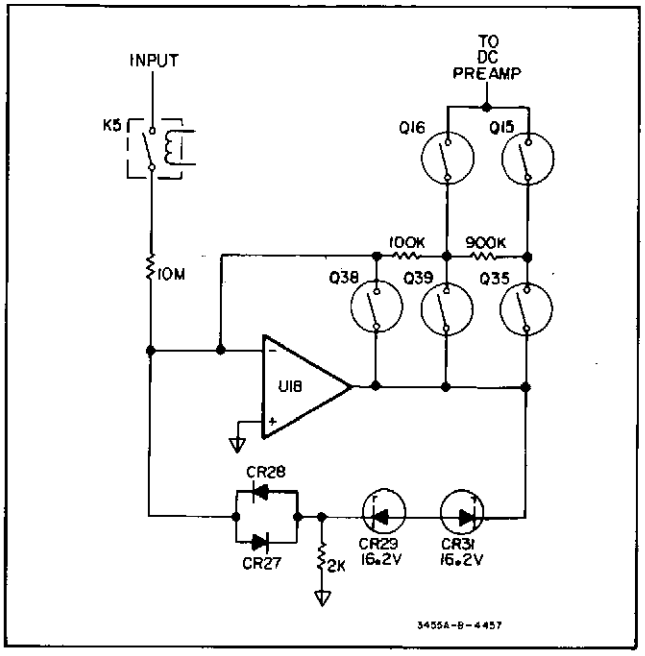

Figure 8-3. Operational Attenuator Diagram.

analog circuitry of the Voltmeter. This is accomplished by measuring the offset and gain errors and mathematically correcting for them. Each error measurement is stored in "memory" by the main controller as a constant. These constants are sequentially updated. The output reading of the Voltmeter is computed by the Main Controller and is equal to the ratio of the external input to the internal reference, times a range factor. Figure 8-4 shows a very basic diagram of the Voltmeter.

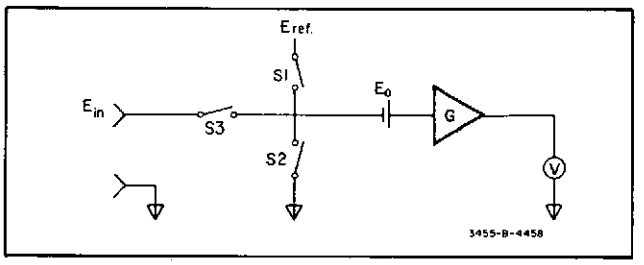

Figure 8-4. Basic Voltmeter Diagram.

A basic equation describing a measurement of one of the three inputs is: $V(\ ) = (E(\ ) + E_0)G$; where $V(\ )$ is the particular output, $E(\ )$ is one of the three inputs, E_0 is the internal offset error, and G is the circuit gain. Closing switch S1 applies the internal reference voltage. The circuit output would be: $V_{ref} = (E_{ref} + E_0)\ G$. The offset error is measured by closing S2, grounding the input. The resultant output would be $V_O = E_OG$. Measurement of the external input would yield $V_{in} = (E_{in} + E_O)G$. The equation describing the Auto-Calibration is:

$$\text{Output Reading} = \frac{V_{in} - V_o}{V_{ref} - V_o} \times K_r$$

Substituting the basic equations into the Auto-Cal equation would yield:

$$\text{Output Reading} = \frac{(E_{in} + E_o)\ G - E_oG}{(E_{ref} + E_o)\ G - E_oG} \times K_r$$

This equation reduces to:

$$\text{Output Reading} = \frac{E_{in}}{E_{ref}} \times K_r$$

or: the output reading is equal to the ratio of the

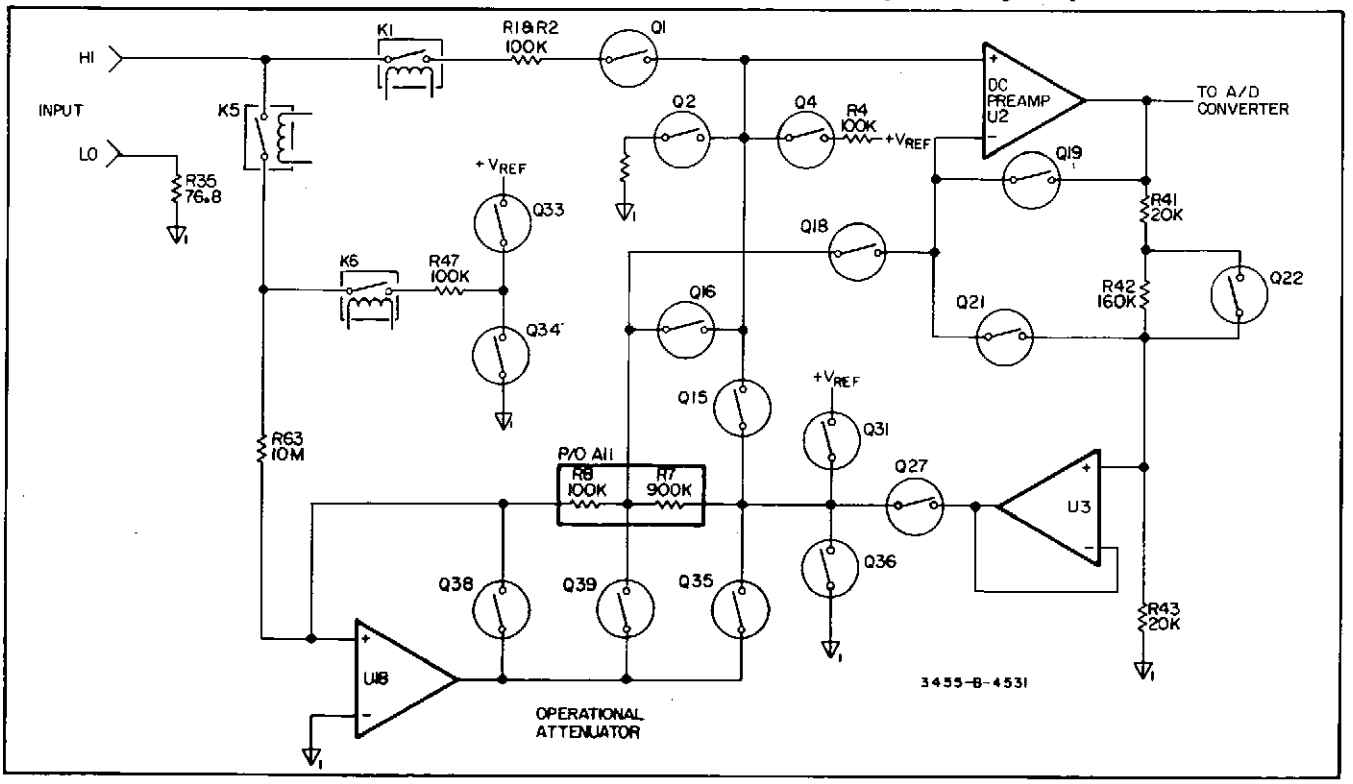

Figure 8-5. Simplified Auto-Cal Switching Schematic.

external input voltage to the internal reference voltage times the range factor (K_r).

8-22. Circuit Description.

8-23. Figure 8-5 shows a simplified schematic of the auto-cal switching circuitry. The following paragraphs describe circuit operation for the various auto-cal measurements.

8-24. 10 V dc Input Offset Error Measurement. Figure 8-6 illustrates the circuit configuration for making the 10 V dc

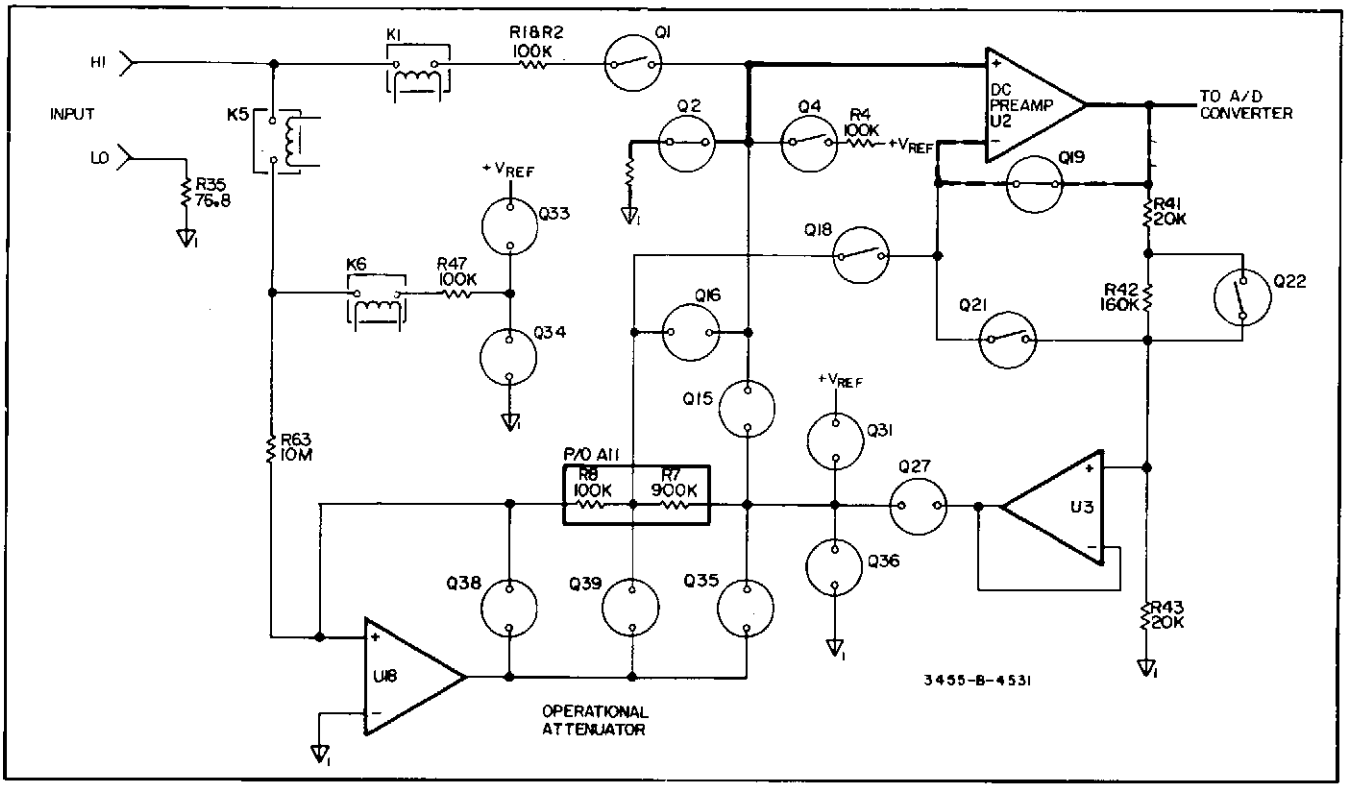

Figure 8-6. 10 V dc Input Offset Error Measurement.

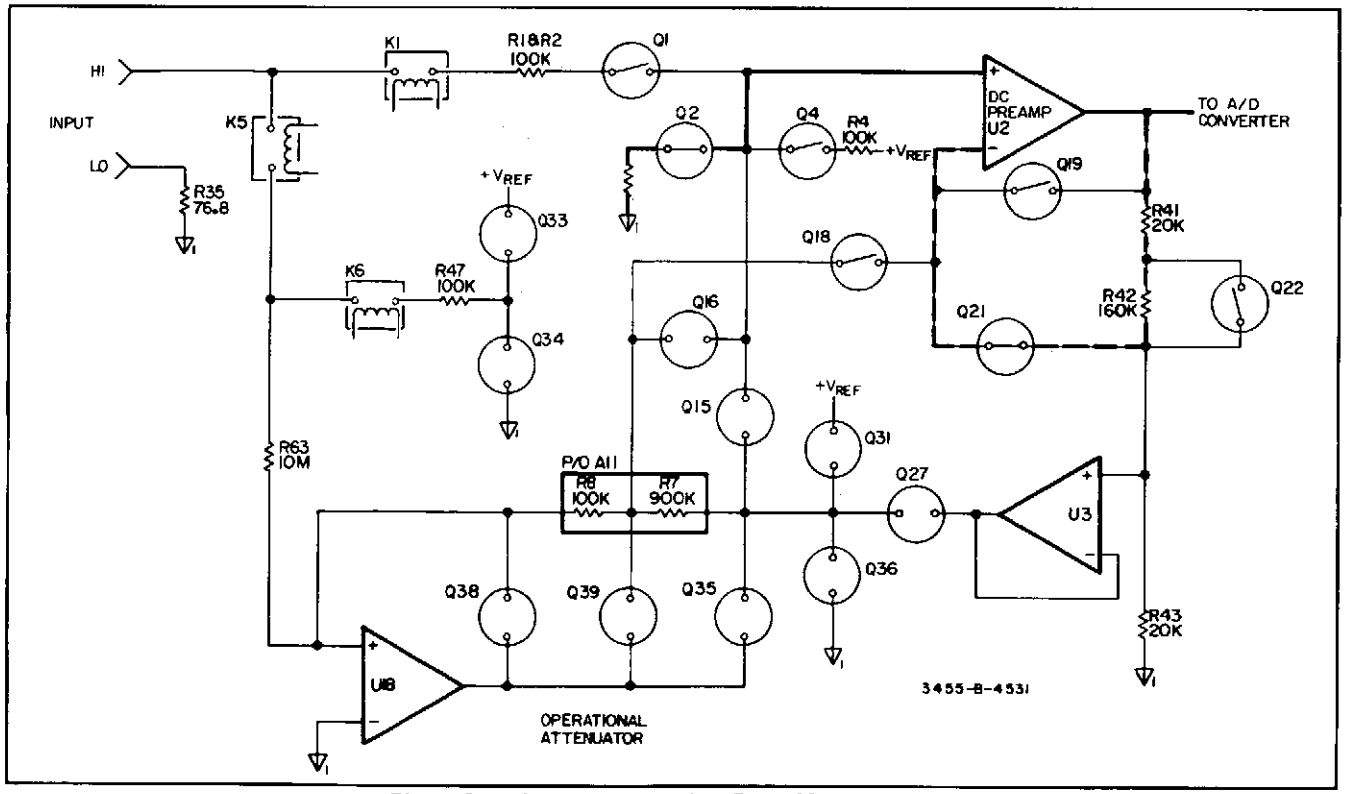

Figure 8-7. 1 V dc Input Offset Error Measurement.

Offset Error Measurement. The DC Preamp input is grounded through a 100 kilohm resistor by FET switch A10Q2. A DC Preamp gain of X1 is selected by FET switch A10Q19. The resultant measurement is the offset voltage present on the 10 V dc range. This number is stored by the main controller for use in correcting measurements made on the 10 V dc range.

8-25. 1 V dc and .1 V dc Input Offset Error Measurement. Offset error measurements on the 1 V dc and .1 V dc ranges are made in the same manner as the 10 V dc range except for DC Preamp gains of X10 for the 1 V dc range and X100 for the .1 V dc range. The circuit configuration for the 1 V dc Offset Error Measurement is shown in Figure 8-7. A DC Preamp gain of X10 is selected by FET switch A10Q21.

Figure 8-8 shows the circuit configuration for making the .1 V dc Offset Error Measurement. In this case, the feedback path for the DC Preamp is through Amplifier A10U3, which has unity gain, FET switch Q27, the precision 10-to-1 divider (A11R7 and A11R8) and FET switch A10Q18 for a gain of 100. The resultant measurements are stored by the main controller to correct measurements made on the .1 V dc and 1 V dc ranges.

8-26. 100 V dc and 1000 V dc Input Offset Error Measurement. On the 100 V dc and 1000 V dc ranges the input of the operational attenuator is grounded through a 100 kilohm resistor by relay A10K6 and FET switch A10Q34 (see Figure 8-9). On the 100 V dc range, the feedback of the operational attenuator is selected by FET switch A10Q35 (attenuation of 10-to-1). The output of the operational attenuator is applied to the input of the DC Preamp through FET switch A10Q15. Attenuator feedback on the 1000 V dc range is selected by FET switch A10Q39 (attenuation of 100 to 1) and is applied to the DC Preamp input through FET switch A10Q16. DC Preamp gain is X1 for both error measurements.

8-27. 10 V dc Gain Error Measurement. On the 10 V dc range the gain error measurement is made by applying the internal reference voltage (+ 10 V dc), through a 100 kilohm resistor and FET switch A10Q4, to the input of the DC Preamp (see Figure 8-10). A DC Preamp gain of X1 is selected by FET switch A10Q19. The measurement result is stored by the main controller as the 10 V dc full scale constant.

8-28. .1 V dc and 1 V dc Gain Error Measurement. On the 1 V dc range, the reference voltage is applied to the DC Preamp input through the precision ten-to-one divider (A11R7 and R8) by FET switches A10Q31 and A10Q16 (see Figure 8-11). The lower end of the ten-to-one divider is held at virtual ground by closing FET switch A10Q38. Output of the ten-to-one divider is 1 V dc. A DC Preamp gain of X10 is selected by FET switch A10Q21. The measurement result is stored by the main controller as the 1 V dc full scale constant.

8-29. A separate gain error measurement is not made for the .1 V dc range. Since the only difference between the 1 V dc and .1 V dc circuit configuration is a precise gain of ten, the .1 V dc gain error constant is computed by the main controller.

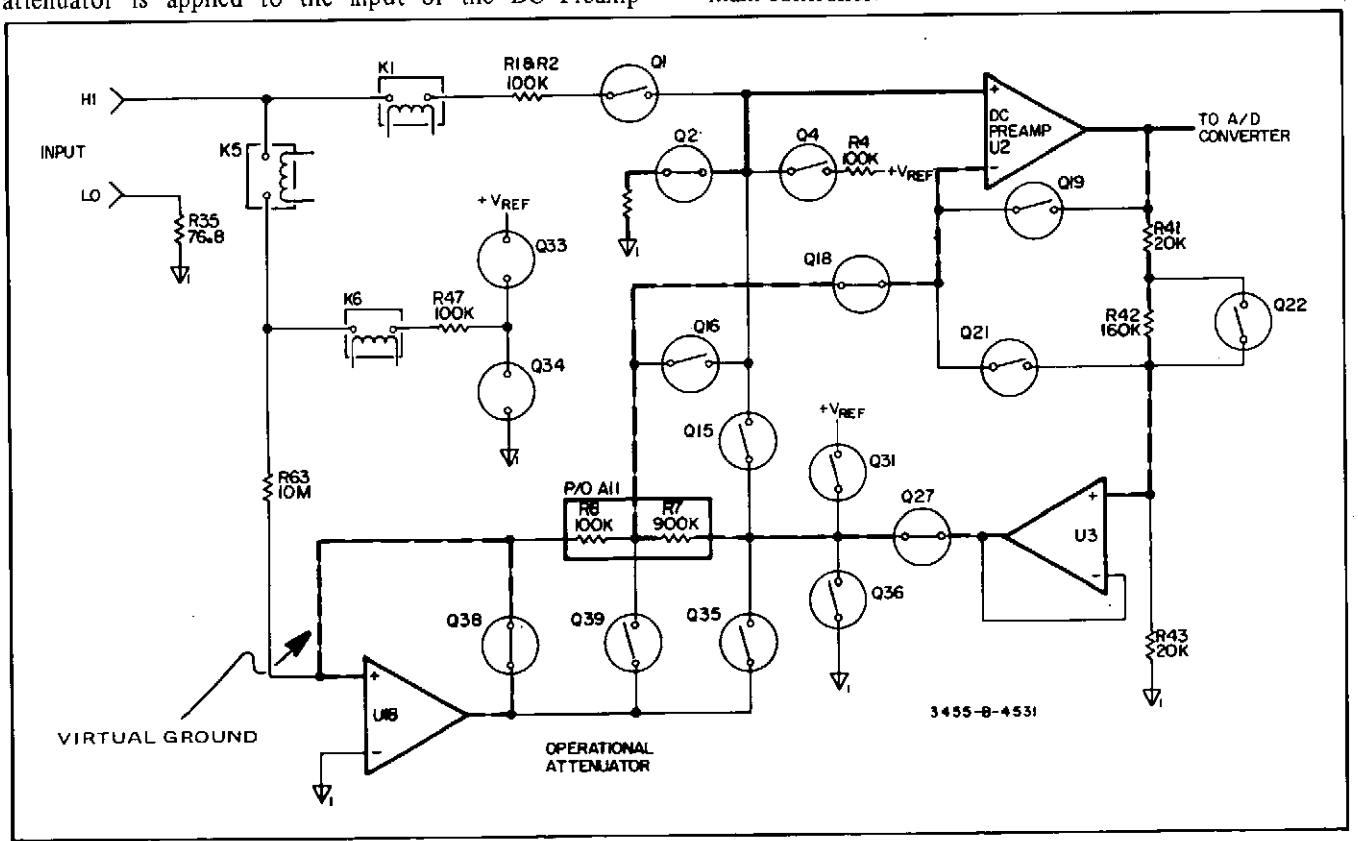

Figure 8-8. .1 V dc Input Offset Error Measurement.

8-30. 1 V dc Reference Offset Error Measurement. Since the 1 V dc full scale reference was derived by dividing the internal reference by the precision ten-to-one divider, a separate offset Error measurement is made to include any offsets present in the ten-to-one divider and associated circuitry. Figure 8-12 illustrates the circuit configuration

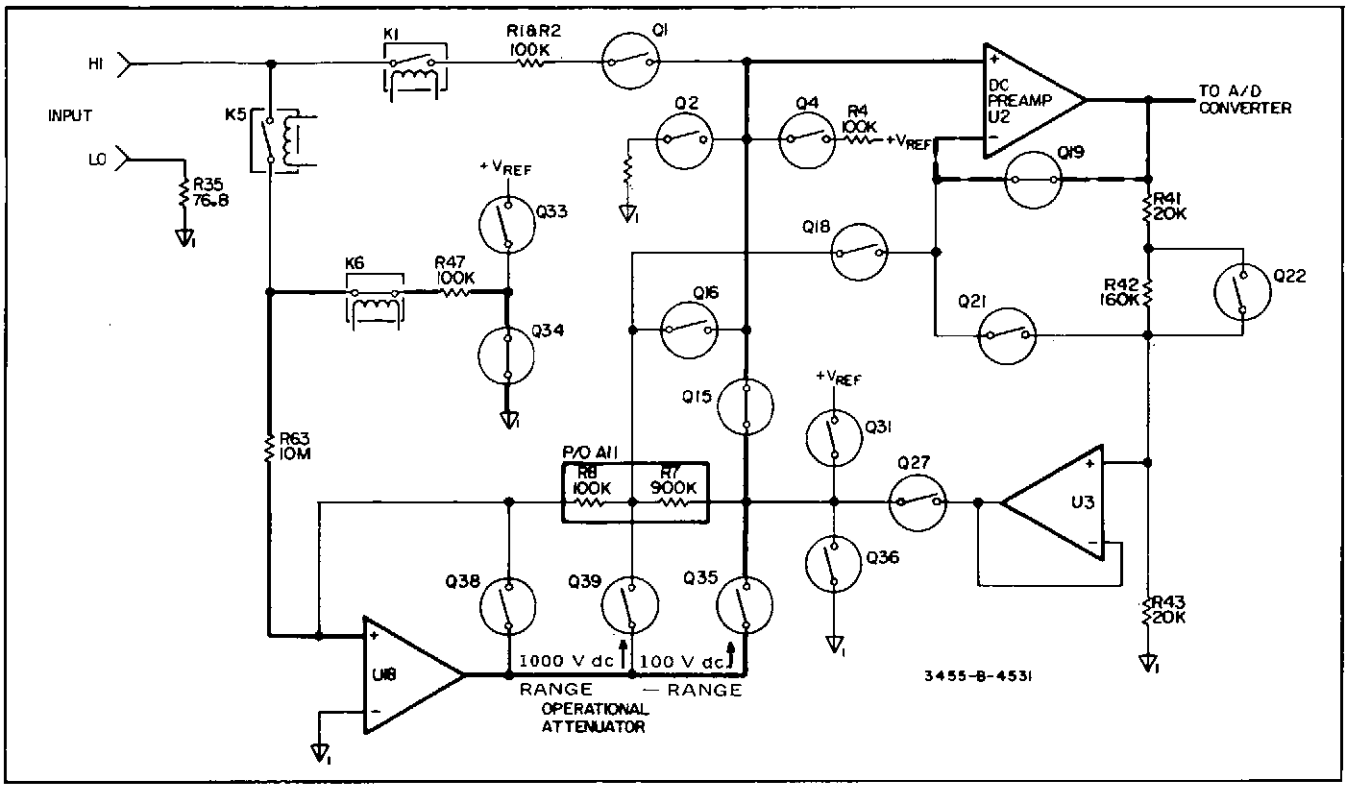

Figure 8-9. 100 Vdc and 1000 Vdc Input Offset Error Measurement.

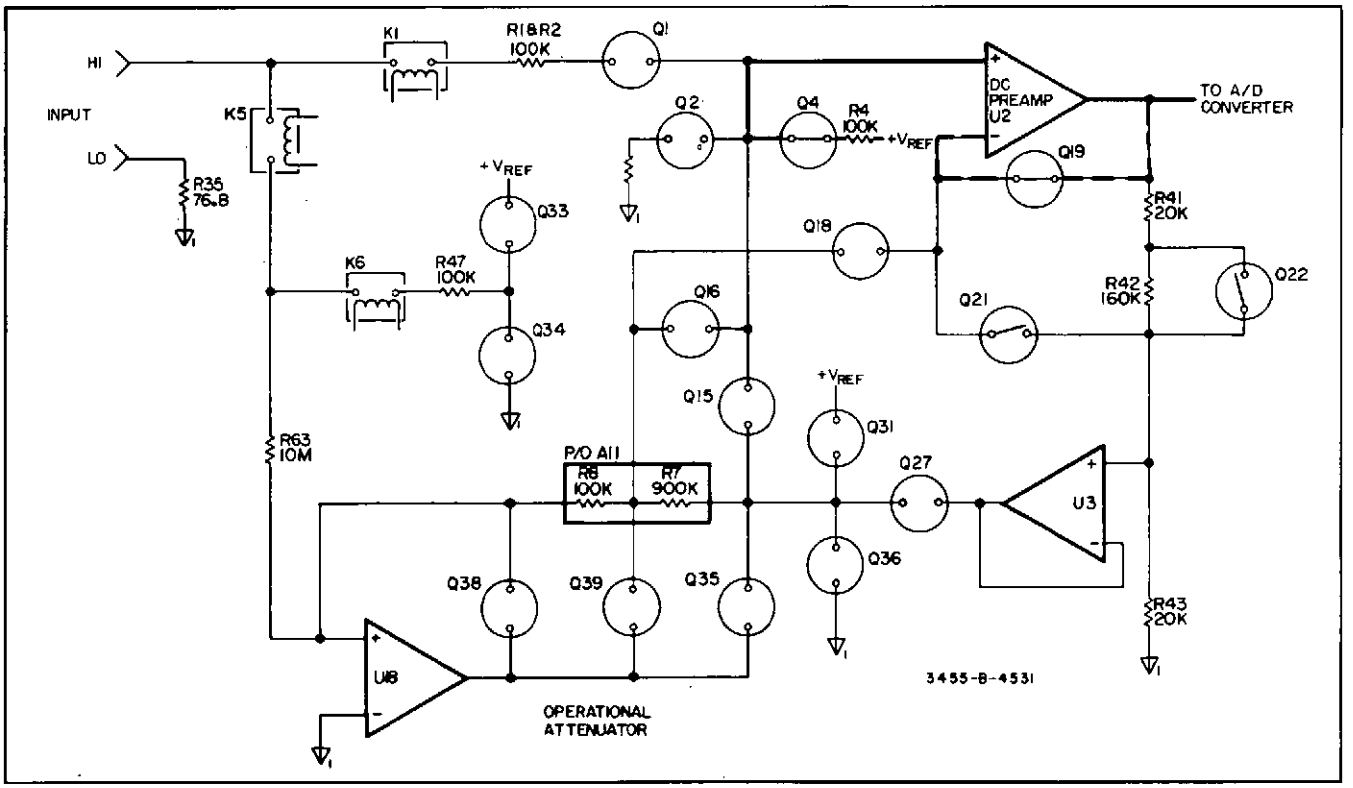

Figure 8-10. 10 V dc Gain Error Measurement.

for the 1 V dc Reference Offset Error Measurement. The input of the DC Preamp is grounded through the ten-to-one divider by FET switch A10Q16. Preamp gain is X10.

8-31. 100 V dc and 1000 V dc Gain Error Measurement. Figure 8-13 shows the circuit arrangement for making the 100 V dc gain error measurement. The reference voltage is

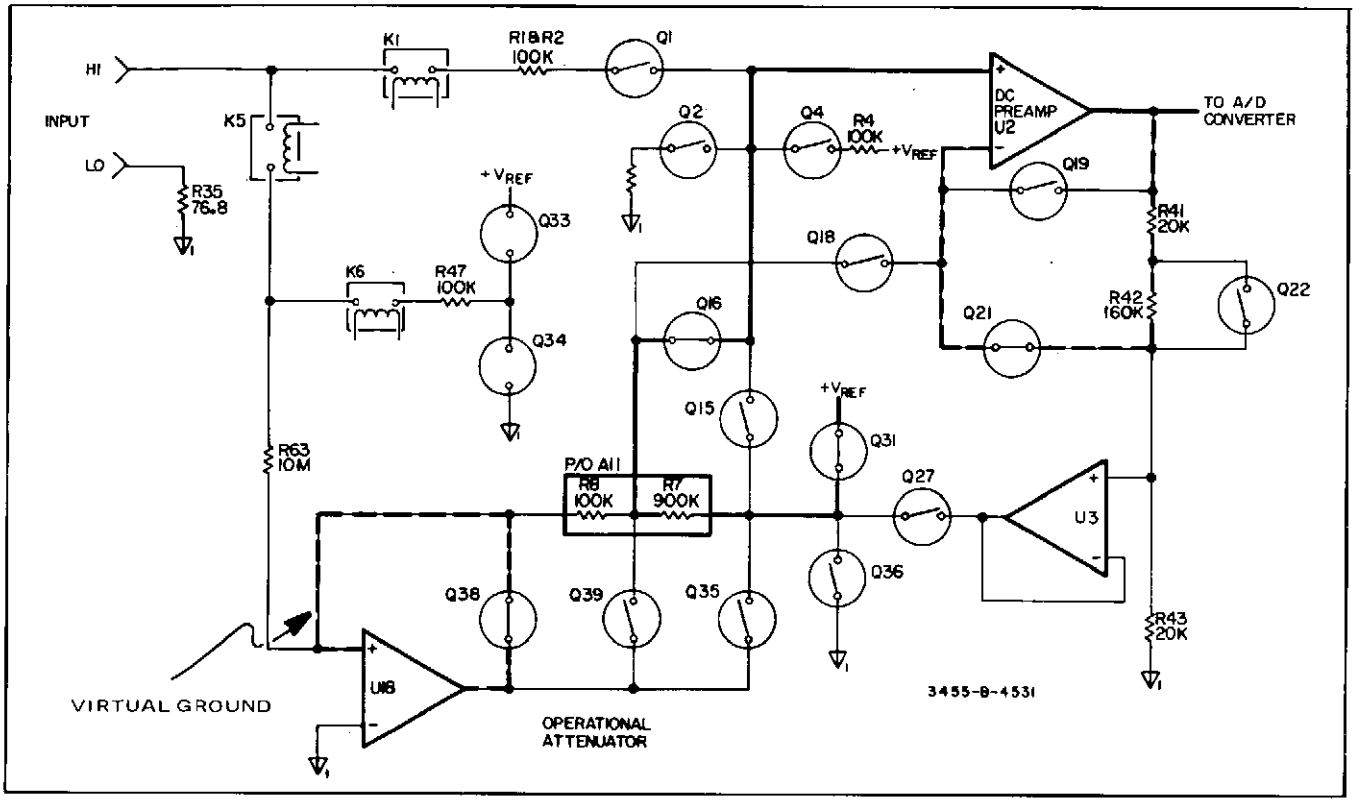

Figure 8-11. .1 V dc and 1 V dc Gain Error Measurement.

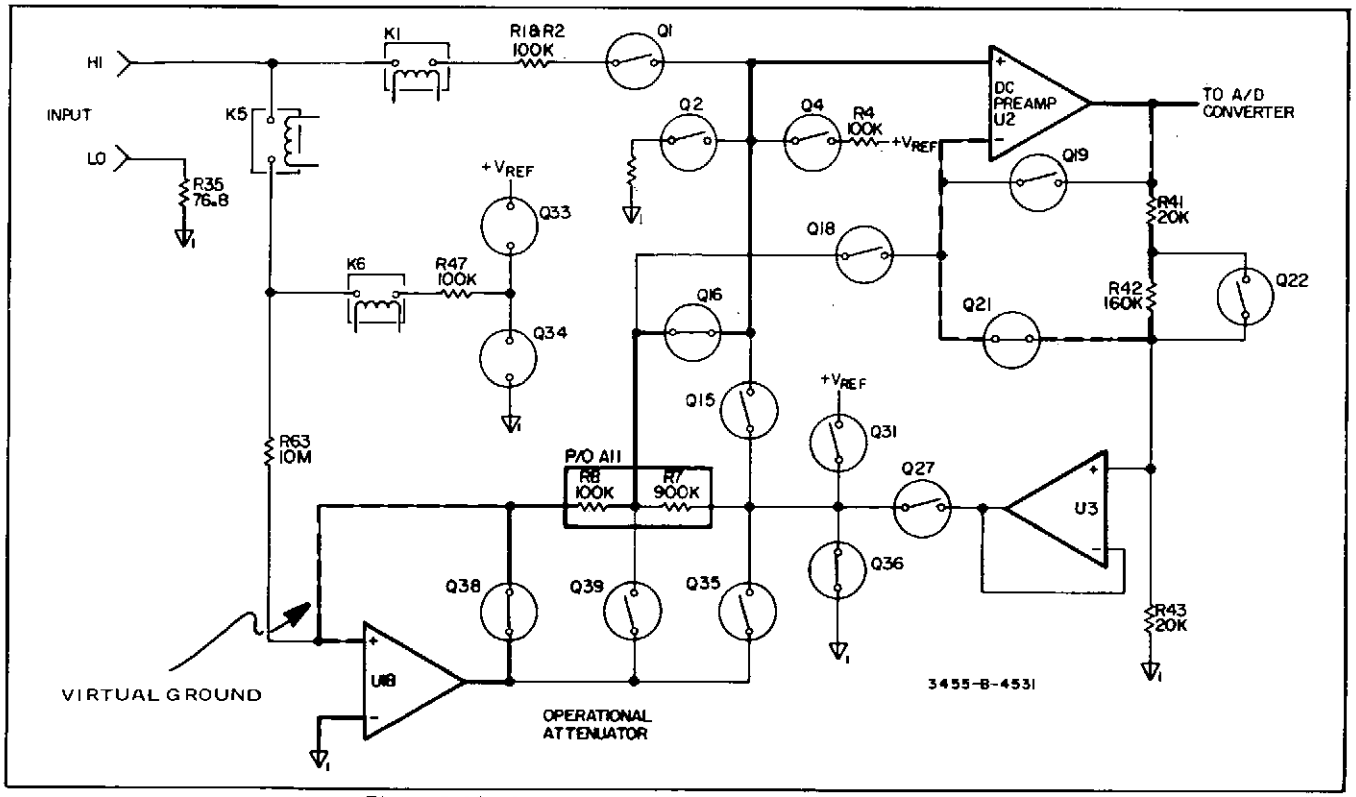

Figure 8-12. 1 V dc Reference Offset Error Measurement.

connected to the input of the operational attenuator through FET switch A10Q33 and relay A10K6. The attenuator is set to a gain of 0.1 (10 to 1 attenuation) by FET switch A10Q35. The output of the operational attenuator is connected to the DC Preamp input by FET switch A10Q15. A DC preamp gain of X10 is selected by FET switch A10Q21. The measurement result is stored by the main controller as the 100 V dc gain error constant.

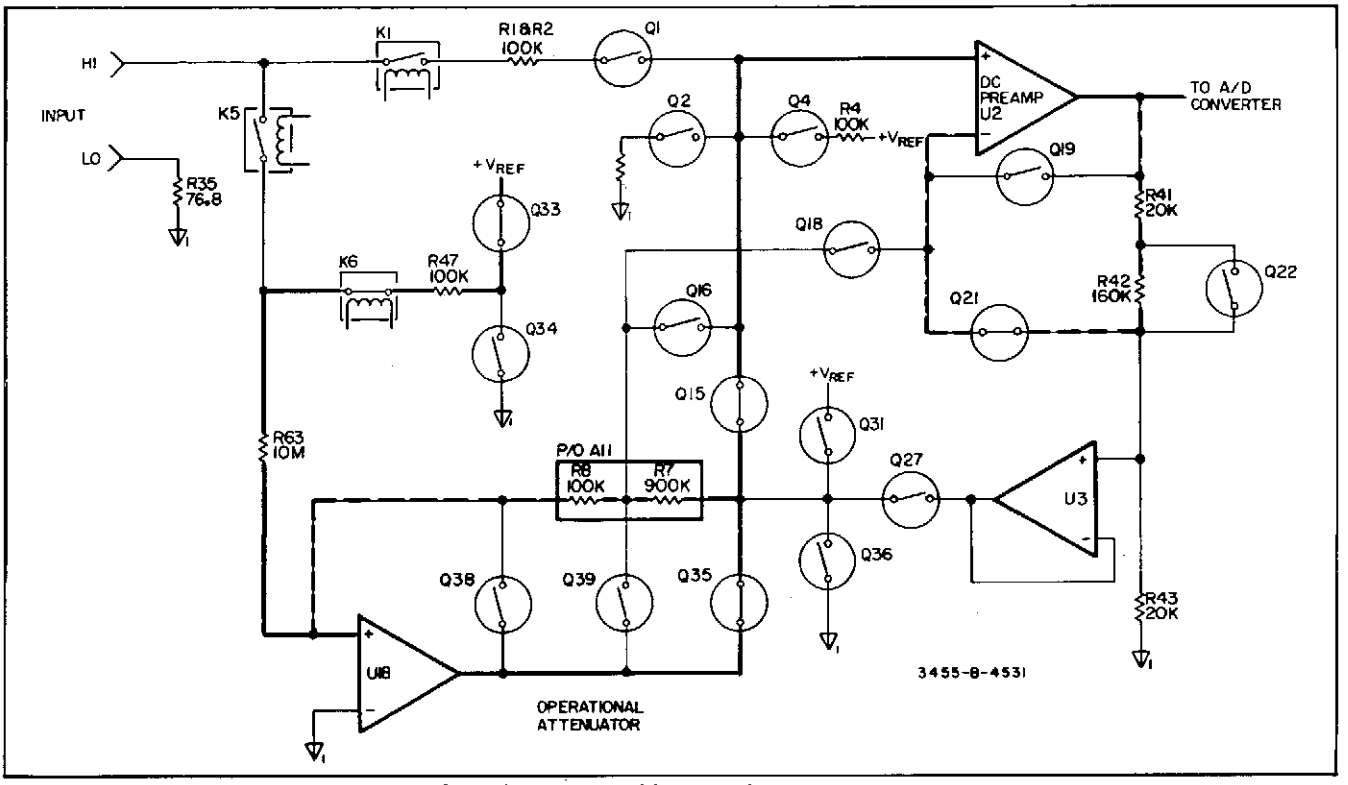

Figure 8-13. 100 V dc and 1000 V dc Gain Error Measurement.

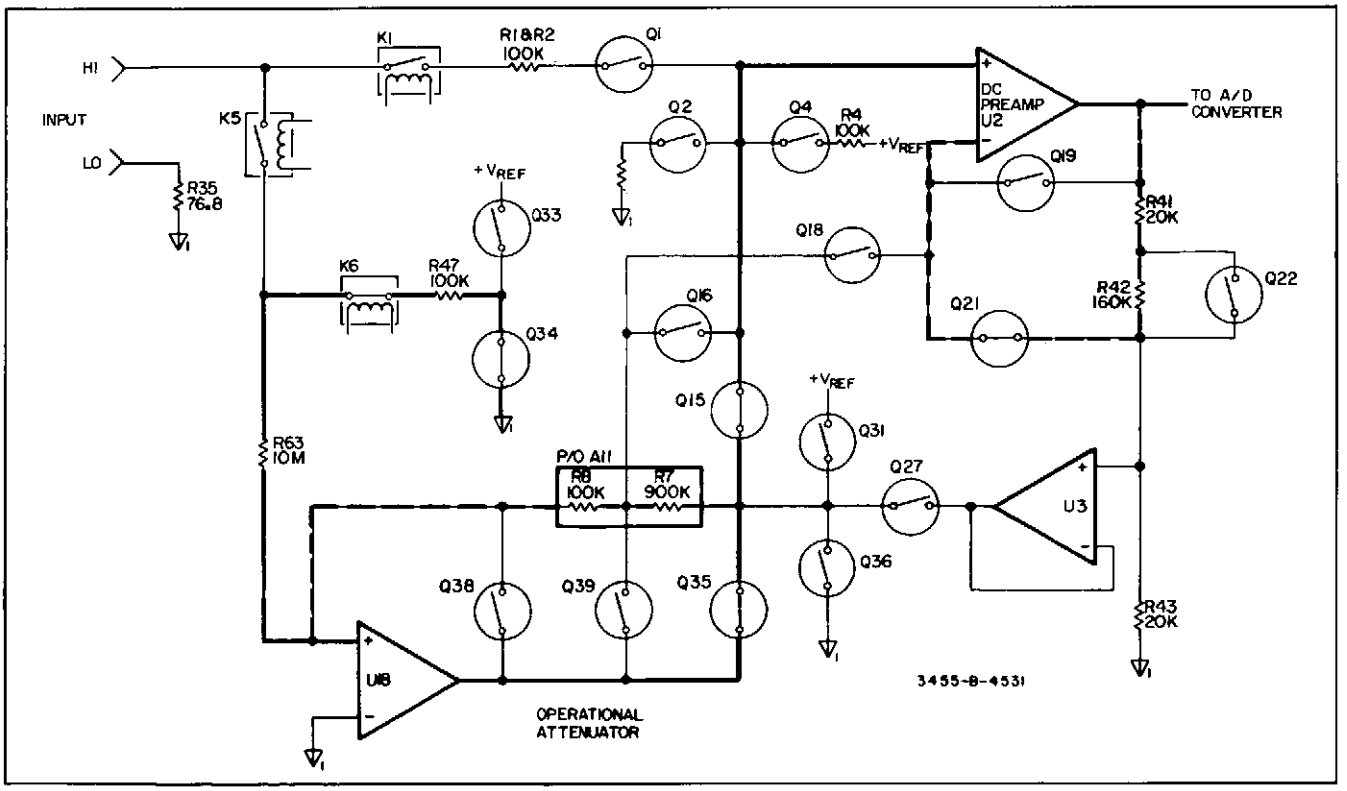

Figure 8-14. 100 V dc Reference Offset Error Measurement.

8-32. A separate gain error measurement is not made for the 1000 V dc range. Since the only difference between the 100 V dc and 1000 V dc circuit configuration is a precise attenuation difference of 10, the 1000 V dc gain error constant is computed by the main controller.

8-33. 100 V dc Reference Offset Error Measurement. Since the reference voltage for the 100 V dc range is divided by the operational attenuator; a separate offset error measurement is made to include any offsets which might be associated with the attenuator and FET switches used. Figure 8-14 illustrates the circuit configuration for this measurement.

8-34. AUTO-CALIBRATION - OHMS.

8-35. General.

8-36. During the ohms function the ohms converter supplies a current through both the unknown resistance and the reference resistance (see Figure 8-15). Since the same current flows through both resistors, their respective voltage drops are proportional. As with the DC Auto-Cal sequence, the offset errors are measured and subtracted from the unknown and reference resistance measurements. The voltage developed across the unknown resistor is measured by closing S1 while the reference voltage, developed across the reference resistor, is measured by closing S2. The value of the unknown resistance is computed by the main controller. An equation describing this computation is:

$$R_x = \frac{-[(V_{Rx} + E_o)\,G_1 - E_o\,G_1]}{(V_{REF} + E_o)\,G_2 - E_o\,G_2} K_R$$

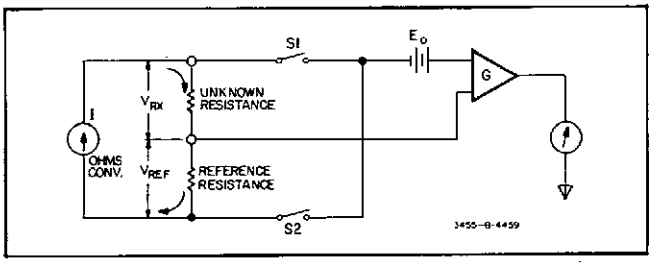

Figure 8-15. Basic Ohms Measurement Diagram.

where R_X is the unknown resistance value, V_{RX} is the voltage drop across the unknown resistance, V_R ref. is the voltage drop across the reference resistance, E_o is the input offset error, G_1 and G_2 are the circuit gains of the particular measurements, and K_r is the range factor. This equation simplifies to:

$$R_X = \frac{V_{RX}\,G_1}{V_{REF}\,G_2} K_r$$

8-37. Circuit Description.

8-38. .1 kΩ, 1 kΩ, 1 MΩ Offset Error Measurements. The offset error constants derived for the .1 V dc and 1 V dc ranges are also used for the .1 kΩ, 1 kΩ, and 1 MΩ offset error constants, since the circuit configurations are the same. Refer to Paragraph 8-25 for a description of these offset error measurements.

8-39. 10 kΩ, 100 kΩ, 10 MΩ Offset Error Measurements. Two additional offset measurements are made to compensate for errors which might be present when making measurements on the 10 kΩ, 100 kΩ, or 10 MΩ ranges. Figure

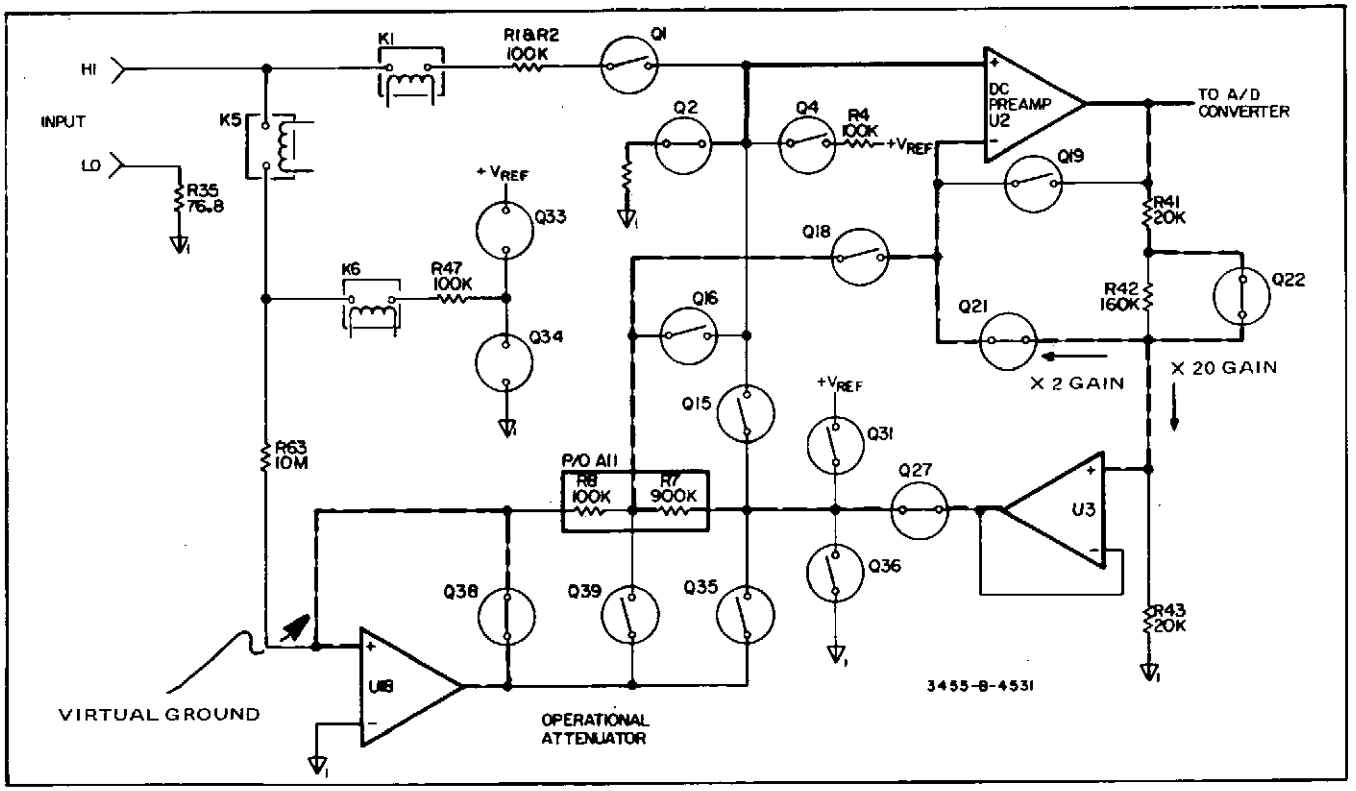

Figure 8-16. 10 kΩ, 100 kΩ, 10 MΩ Offset Error Measurement.

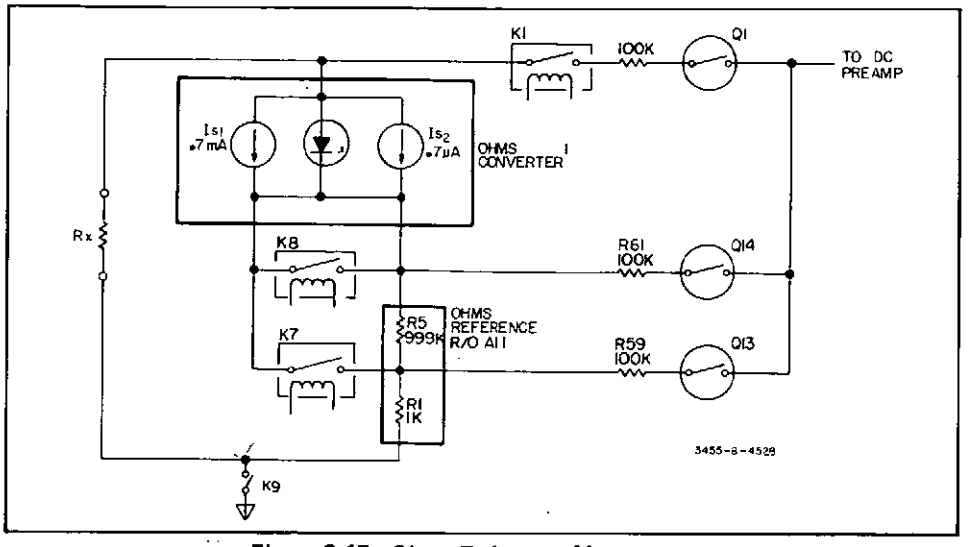

Figure 8-17. Ohms Reference Measurement.

Note 1: VOLTAGE LIMITED TO 5 V.

8-16 illustrates the circuit configuration for these measurements. The DC Preamp input is grounded through a 100 kΩ resistor by FET switch A10Q2. The feedback path for the X2 gain is through FET switches A10Q22 and A10Q21. Feedback for X20 gain is through A10Q22, isolation amplifier A10U3, switch A10Q27, the precision 10-to-1 divider and switch A10Q18. A separate measurement is made for both gains and the results are stored by the main controller.

8-40. .1 kΩ, 1 kΩ, 10 kΩ Reference Measurements. The ohms reference voltage is developed across the reference resistance. On the .1 kΩ through 10 kΩ ranges the reference resistance is 1 kΩ (see Figure 8-17). The .7 mA current source is connected to the 1 kΩ reference through relay A10K7. The 999 kΩ reference resistor is shorted by the combination of relay A10K7 and A10K8. The reference voltage is applied to the DC Preamp input through FET switch A10Q13. The reference is measured prior to each measurement of the unknown resistance.

8-41. 100 kΩ, 1 MΩ, 10 MΩ Reference Measurements. On the 100 kΩ range, A10K7 is opened and the .7 mA current source is applied to the combination of R1 and R5 (1 MΩ). The reference voltage developed across R1 and R5 is applied to the DC Preamp input through FET switch A10Q14. On the 1 MΩ and 10MΩ ranges, relay A10K8 is opened and the .7 µA current source is applied to the 1 MΩ reference resistance. The reference voltage is applied to the DC Preamp input through A10Q14.

8-42. AUTO CALIBRATION–A/D CONVERTER.

8-43. Two Auto-Cal measurements are made to correct errors which might be generated in the A/D Converter. One

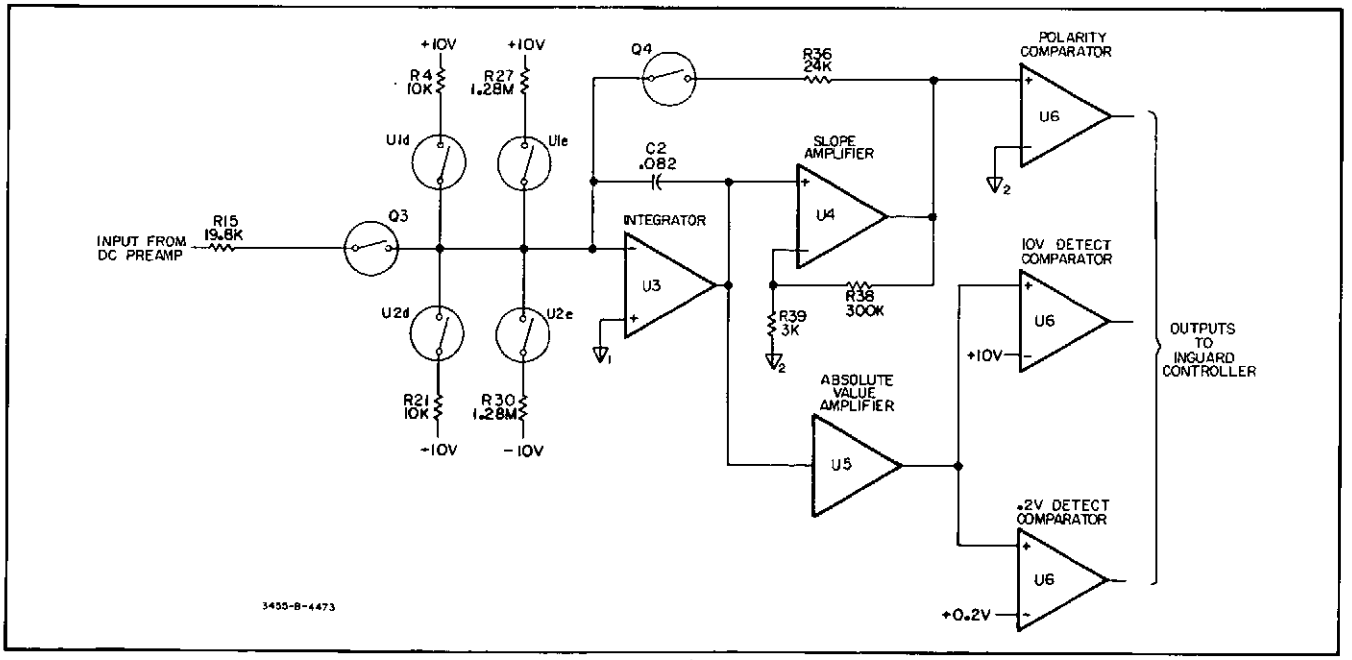

Figure 8-18. Simplified A/D Converter Diagram.

measurement is made to correct for offsets. The second measurement is made to correct for any difference between the plus and minus "run-down" current references.

8-44. Circuit Description.

8-45. Offset Error Measurement. Figure 8-18 shows a simplified schematic of the A/D Converter. During the offset error measurement all input switches to the integrator are opened. During the integration period, the integrator is permitted to charge to a voltage equal to any offset current present in the integrator circuit. At the end of the integration period the integrator is "run-down" and the offset digitized and stored as the A/D Converter offset error by the main controller.

8-46. Current Ratio Measurement. During the current ratio measurement the plus and minus references are applied to the input of the integrator through diode switch U1d and U2d. The references are switched at a 1 millisecond rate during the integration period (133 milliseconds). At the end of the integration period, the accumulated charge on the integrator is "run-down" digitized and stored as the current ratio constant. The purpose of this measurement is to correct for any imbalance between the positive and negative current references.

8-47. TRUE RMS AC CONVERTER.

8-48. General.

8-49. The rms converter uses operational circuitry, rather than a thermal element, to convert the ac signal to a dc level equivalent to the rms value of the input signal. Use of the operational rms converter permits faster ac measurement rates. The frequency range of the true rms converter is 30 Hz to 1 MHz during normal operation and 300 Hz to 1 MHz during fast ACV operation. Full scale output of the rms converter is 6.6667 V dc. Figure 8-19 is a simplified schematic of the true rms converter. The mathematical expression describing the measurement of an rms level is V output = $\sqrt{\overline{V\,in^2}}$ which states that the output voltage (Vo) is equal to the square root of the average of the absolute value of the input voltage (V_{in}) squared. The circuitry used in the rms converter solves for the expression $\sqrt{\overline{|Vin|^2}}$ which is identical to $\sqrt{\overline{Vin^2}}$.

8-50. Circuit Description.

8-51. AC Input Attenuator. The input attenuator of the rms converter is an RC circuit which provides a fixed attenuation of 100-to-1 on the 100 V ac and 1000 V ac ranges. Attenuator switching is performed by reed relays which are controlled by the inguard controller.

8-52. Input Amplifier. An operational amplifier with fixed gains of x1 and x0.1 is used as the input amplifier. The combination of amplifier gain and input attenuation are used to maintain a full-scale output of 1 V rms from the input amplifier. Table 8-1 shows the input attenuation and amplifier gain combinations used on each range.

Table 8-1. AC Converter Ranging.

Voltage Range	Input Attenuation Factor	Amplifier Gain	Total Gain
1 V	1	1	1
10 V	1	0.1	0.1
100 V	.01	1	0.01
1000 V	.01	0.1	0.001

8-53. Absolute Value Amplifier. The absolute value amplifier, as the name implies, solves for the absolute value of the signal input to it. The operation of this circuit is similar to a full wave rectifier. That is the negative portion of the signal is inverted and combined with the positive portion. The resultant positive signal is applied to the input of the squaring amplifier.

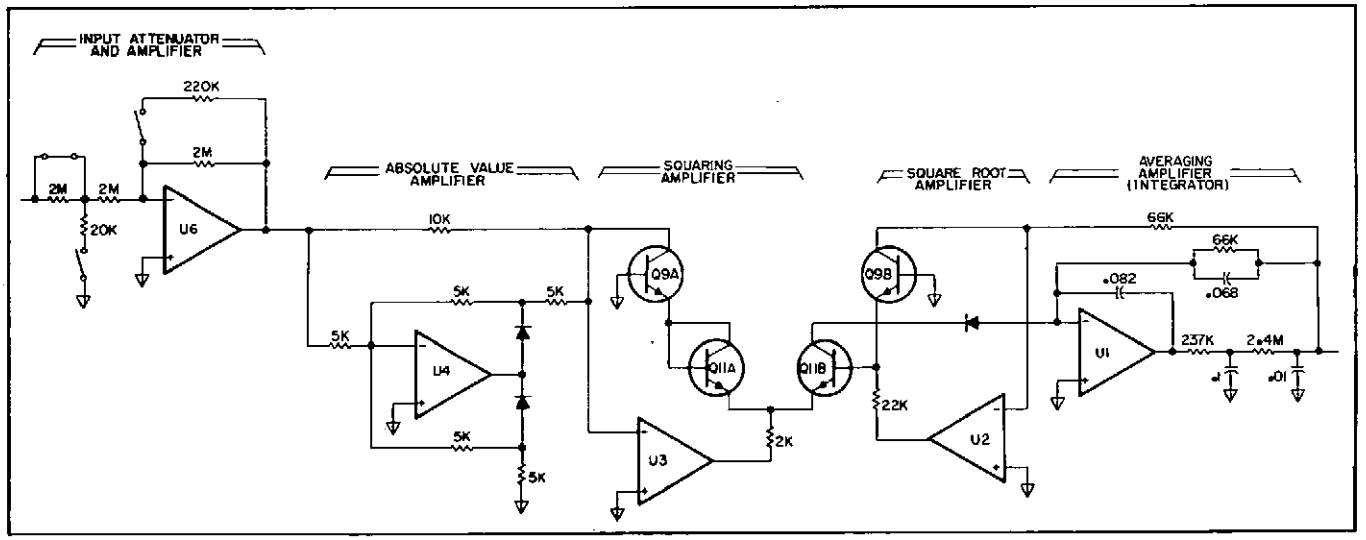

Figure 8-19. Simplified True RMS Converter.

8-54. Squaring Amplifier. The squaring amplifier is a log amplifier circuit which takes the log of the input voltage, or in this case since there are two transistors (Q9A and Q11A) in the feedback loop, takes twice the log of the input voltage. Therefore, the output of the squaring amplifier is equal to 2 log $|V\ in|$ or log $|V\ in|^2$.

8-55. Square Root and Averaging Amplifier. The square root amplifier reverses the action of squaring amplifier. The input to the amplifier is through logging transistors Q11B and Q9B. Output of the square root amplifier is equivalent to 1/2 log $|\overline{V\ in}|^2$ or log $\sqrt{|\overline{V\ in}|^2}$. The operations of the square root amplifier and the averaging amplifier are simultaneous and inter-dependent. The combined output of the two circuits is a dc level proportional to the rms value of the input signal.

8-56. AVERAGE RESPONDING AC CONVERTER (Option 001).

8-57. General.

8-58. The average ac converter is an average responding circuit calibrated to the rms value of a sinusoidal input. Full scale output of the converter is 6.6667 V dc for all ranges. Figure 8-20 shows a simplified schematic of the converter.

8-59. Circuit Description.

8-60. AC Input Attenuator. The ac input attenuator is an RC circuit which provides a fixed attenuation of 100-to-1 on the 100 V ac and 1000 V ac ranges. Attenuator switching is done by reed relays which are controlled by the inguard controller. Input resistance of the AC Converter is approximately 2 megohms.

8-61. Converter Amplifier. The converter amplifier uses a dual FET input stage to maintain a high input impedance. An operational amplifier provides the necessary gain to drive the output stage of the converter amplifier. The output stage of the amplifier is a current driver circuit. Two ac feedback paths provide fixed gains of 1 or 0.1. An integrating amplifier (U4) is used to maintain a dc level of 0 V dc at the output of the Converter Amplifier. The integrating amplifier also determines the low frequency cut-off point of the Converter Amplifier. (The cut-off frequency is approximately 300 Hz on the FAST ACV mode and 30 Hz on the ACV mode.) A diode protection circuit is used to limit the output of the Converter Amplifier to approximately ± 6 V peak to prevent saturation of the amplifier.

8-62. AC Ranging. AC ranging is accomplished by attenuating the input signal and changing the gain of the converter amplifier. The input attenuator provides a fixed attenuation of 100 to 1. The Converter Amplifier has fixed gains of 1 or 0.1. Table 8-1 shows the various combinations of amplifier gain and input attenuation necessary for the input voltage ranging. Full scale output of the Converter Amplifier is approximately 1 volt rms for all ranges.

8-63. Rectifier and Filter Amplifier. The output of the Converter Amplifier is applied to a rectifier circuit which produces both a positive going and a negative going half-wave rectified signal output (see Figure 8-20). The rectified signals are summed to provide ac feedback for the Converter Amplifier. The Filter Amplifier has a fixed gain of approximately 6.6. The feedback circuitry of the Filter Amplifier provides one pole of filtering. The output of the Filter Amplifier is applied to a one pole RC filter network for FAST ACV operation and a two pole RC filter network for ACV operation.

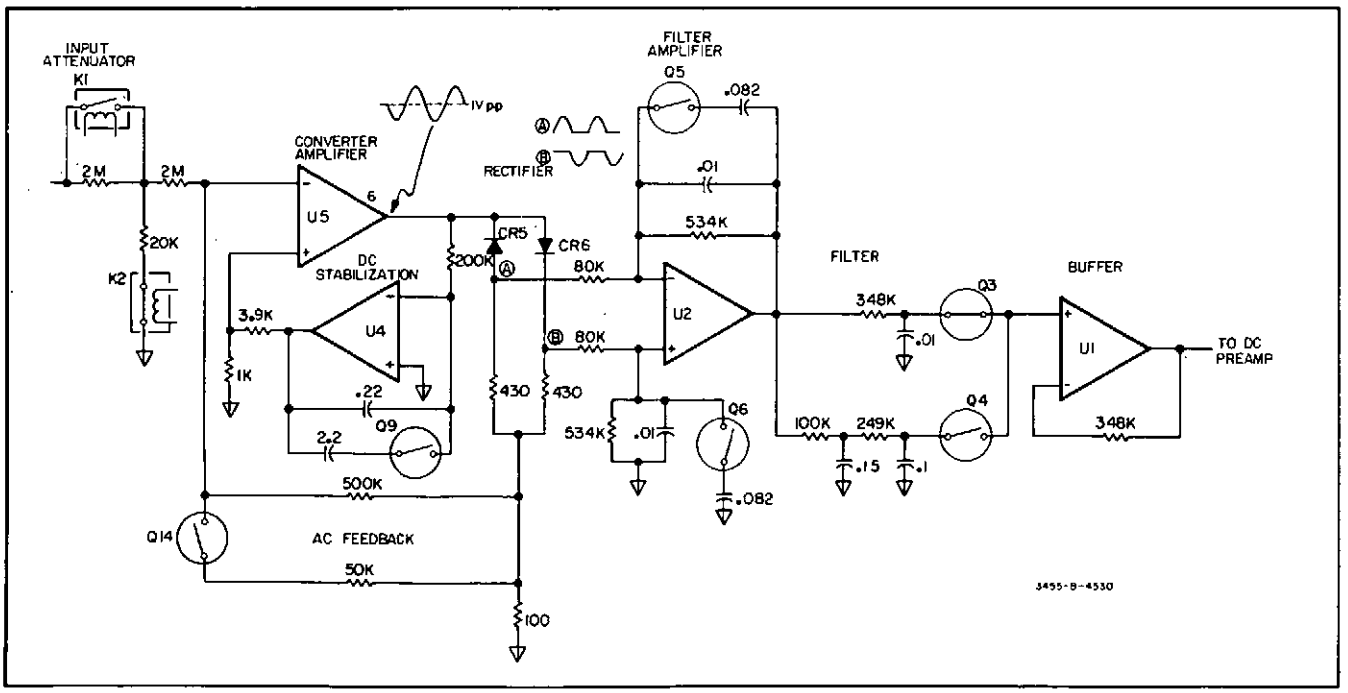

Figure 8-20. Simplified Average Responding AC Converter.

8-64. Output Buffer Amplifier. An Operational Amplifier with unity gain is used to isolate the output of the AC Converter. Full scale output of the AC Converter is + 6.6667 V dc for all ranges.

8-65. OHMS CONVERTER.

8-66. General.

8-67. The Ohms Converter is a voltage limited current source which supplies a constant current through the unknown and reference resistors until the output voltage reaches approximately 4.75 volts dc. At this point the converter becomes a constant voltage source. During the current mode of operation the converter supplies a constant current of .7 mA on the 100 ohm through 100 kilohm ranges or .7 microamps on the 1 and 10 megohm ranges. The converter becomes a constant voltage source when measuring resistance greater than 5.8 kilohm on the 10 and 100 kilohm ranges and greater than 5.8 megohm on the 10 megohm range. Since the same current flows through both the unknown resistance and the reference resistance, the voltage drops across them are directly proportional. The unknown resistance value is the ratio of the voltage drop across the unknown resistance times circuit gain to the voltage drop across the reference resistance times circuit gain multiplied by the range constant; or

$$R_X = \frac{V_{Rx}\ G_1}{V_{REF}\ G_2}\ K_r$$

8-68. Circuit Description.

8-69. Ohms Converter Power Supply. An inverter circuit is used to derive power for the ohms converter. The inverter operates at a frequency of 30.72 kHz on 60 Hz operation or 25.6 kHz on 50 Hz operation. Transformers A10T1 and A12T1 provide complete isolation of the ohms converter.

8-70. Current Source. Figure 8-21 shows a simplified schematic of the current source used in the ohms converter. The circuit is designed to provide an output current of .7 mA or .7 μA. Output current is determined by resistors R3, R5, and R6. During the .7 mA mode of operation, (100 ohm through 100 kilohm ranges) relay K8 shorts resistor R3. The output current is then determined by R6 and is equal to the reference voltage (+ 6.2 V) divided by the resistance of R6, or I_O = 6.2/8.87 K = .7 mA. During the .7 μA mode of operation, (1 megohm and 10 megohm ranges) both K7 and K8 are open. Resistors R5 and R6 form a divider which divides the + 6.2 V reference to + .7 V. The output current is now determined by the .7 V across R3 or I_O = .7 V/1 M = .7 μA. Operational Amplifier U1 drives output transistor Q4 and provides the gain necessary to maintain the proper output current. Relay K7 is used to select a reference resistance of 1 kilohm for the .1 kilohm through 10 kilohm ranges or 1 megohm for the 100 kilohm through 10 megohm ranges. Both the reference resistance and the unknown resistance are in the feedback circuit of the operational amplifier.

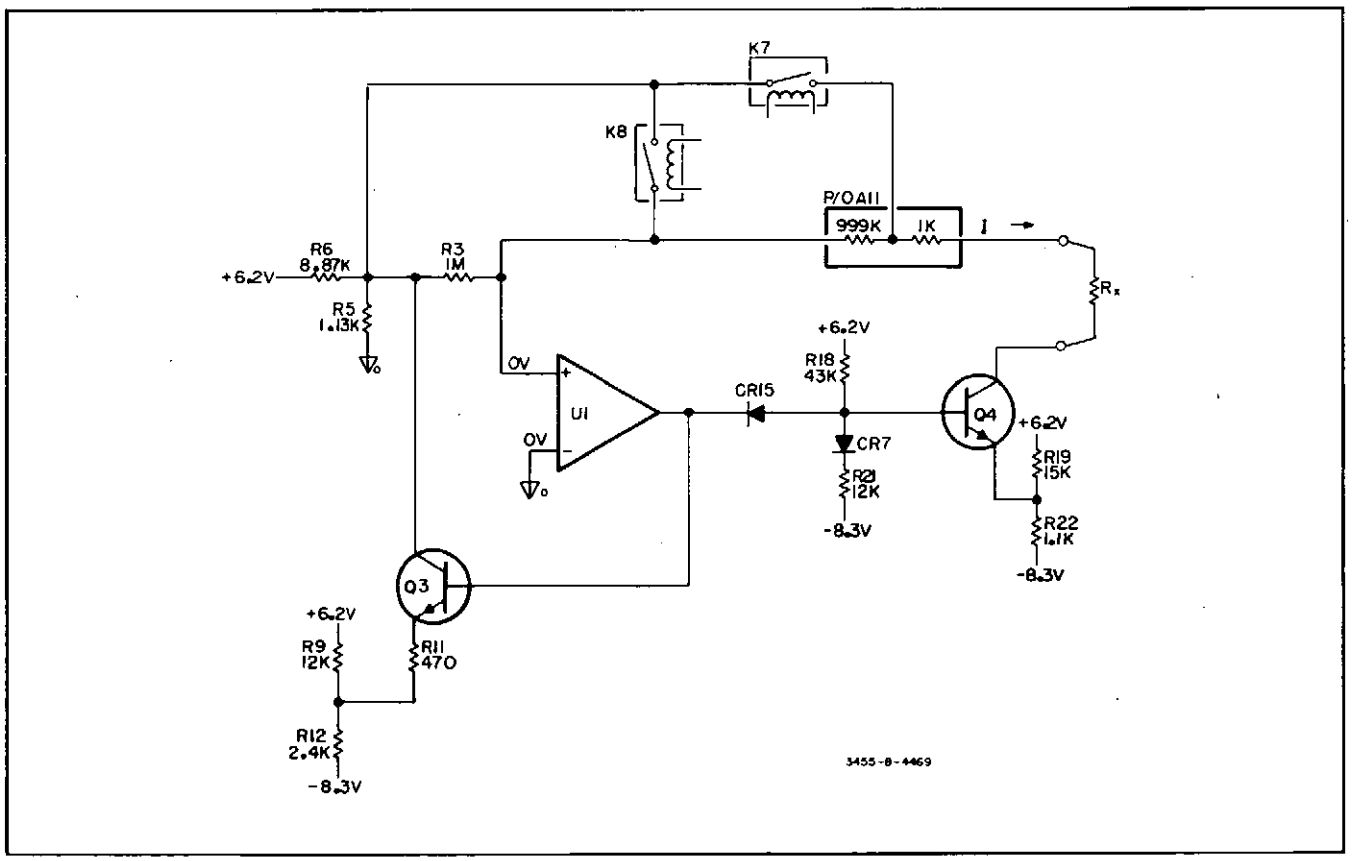

Figure 8-21. Ohms Converter Current Source.

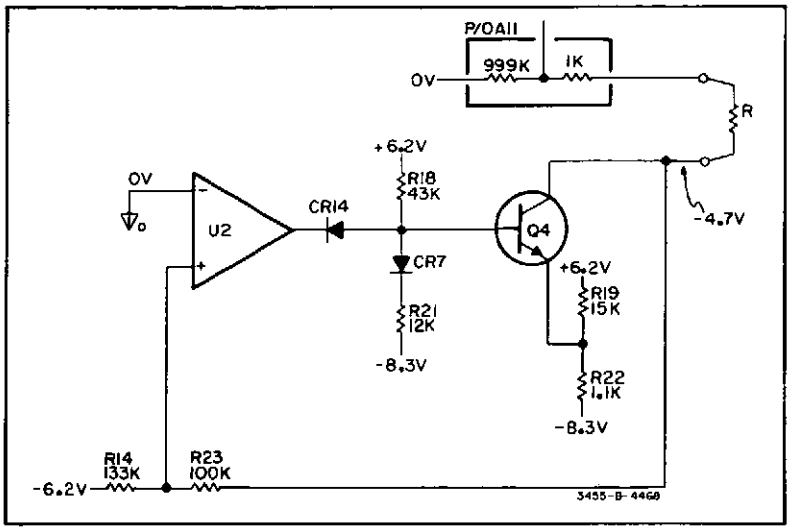

Figure 8-22. Ohms Converter Voltage Limit.

8-71. Voltage Limit. Figure 8-22 shows a simplified schematic of the voltage limit circuit used in the ohms converter. During the current mode of operation the noninverting input of U2 is positive, as referenced to ohms ground. In this mode the positive output of U2 is blocked by CR14, making the voltage limit circuit inoperative. As the resistance of R_X is increased the collector voltage of Q4 becomes more negative. This change is coupled to the noninverting input of U2 through the voltage divider composed of R14 and R23. As the input of U2 approaches 0 V the output reverses polarity and forward biases CR14. At this point U2 takes control of output transistor Q4 and maintains a constant voltage of approximately - 4.7 V dc at the collector. During the time the ohms converter is in the voltage limit mode, transistor Q3 supplies the feedback necessary to balance the current source circuit (see Figure 8-21). The converter operates as a voltage source when measuring resistances greater than 5.8 kilohm on the 100 ohm through 100 kilohm ranges and greater than 5.8 megohm on the 1 megohm and 10 megohm ranges.

8-72. Overload Protection. The ohms converter is protected from the accidential application of high voltage to the ohms terminals by diodes CR1, CR2, CR11 and CR12. These diodes provide a current path through R23 and the ohms reference resistance to dissipate the applied voltage. High voltage diode CR8 prevents current flow through Q4 when a negative voltage is applied to the "High" ohms terminal. High voltage transistor Q4 is biased off to prevent current flow when a positive voltage is applied.

8-73. DC PREAMPLIFIER.

8-74. General.

8-75. The DC Preamplifier provides the necessary isolation and amplificiation of signals from the dc input, ac or ohms converter, and Auto Cal circuits for use in the A-to-D Converter. The DC Preamplifier is designed to provide high input impedance and linear gain characteristics.

8-76. Circuit Description.

8-77. Input Circuit. A dual FET (Q17) is used as the input to the DC Preamplifier to provide high input impedance. The sources of Q17 are driven by a current source (Q24) to maintain linear circuit operation. Operational amplifier U2 provides the gain necessary to drive the output circuit of the preamplifier.

8-78. Output Circuit. The output circuit of the DC Preamplifier consists of an amplifier (Q7 and Q8) and a current source (Q12). Operation of the output amplifier is similar to that of an inverting operational amplifier with a gain of approximately 30 (see Figure 8-23). The amplifier controls the output by shunting current from the current source. The output circuit drives the DC Preamplifier feedback circuitry and the A/D Converter.

8-79. Feedback Circuit. The feedback circuitry for the DC Preamplifier consists of two 10-to-1 resistive dividers, a buffer amplifier, and FET switches. Figure 8-24 shows a simplified schematic of the feedback circuitry and lists the various switch closures necessary for the particular preamplifier gains. Buffer Amplifier U3 is a precision X1 Amplifier used to isolate the output divider from the precision 10-to-1 divider.

8-80. Overload Protection. The preamplifier circuit is protected from saturation by diodes CR4 and CR5. These diodes limit the voltage difference between the drains of Q17. The output of the preamplifier is limited to approximately ± 17 V by zener diode CR7 and diode CR6 clamping the output stage of U2.

8-81. Switch Bias Amplifier. The switch bias amplifier supplies a gate bias voltage for the FET switches to make the gate-to-source voltage equal to zero during the time the FET switches are ON. The bias amplifier has a unity gain and uses an FET input to prevent loading of the input signal. Output of the bias amplifier is coupled through 100 kilohm reistors to the gates of the input switching FET's.

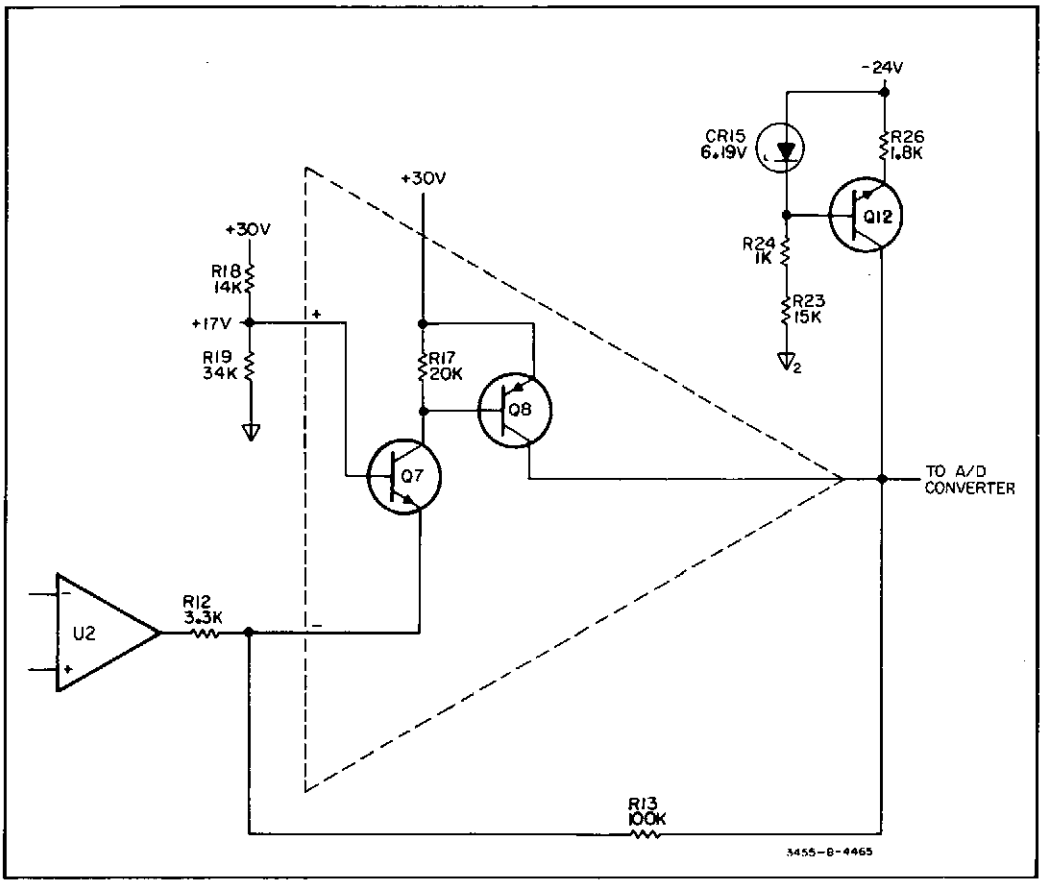

Figure 8-23. Equivalent DC Preamplifier Output Circuit.

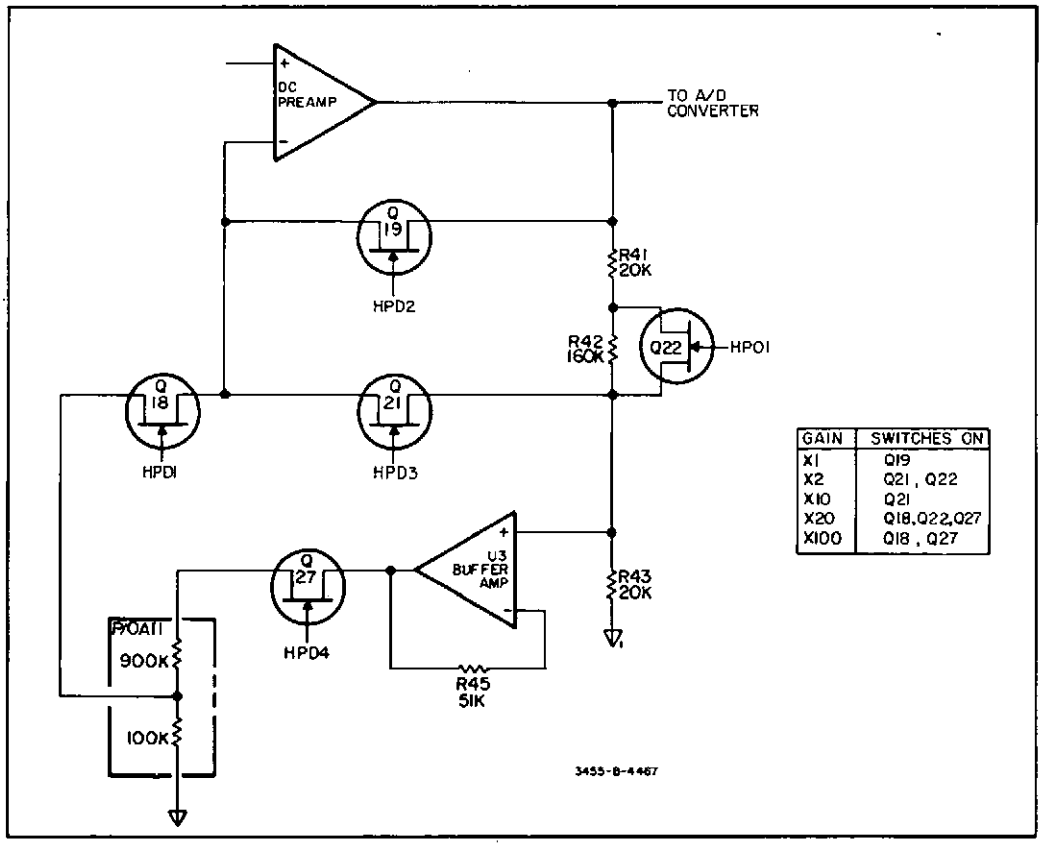

GAIN	SWITCHES ON
X1	Q19
X2	Q21 , Q22
X10	Q21
X20	Q18,Q22,Q27
X100	Q18 , Q27

Figure 8-24. DC Preamp, Simplified Feedback Circuitry.

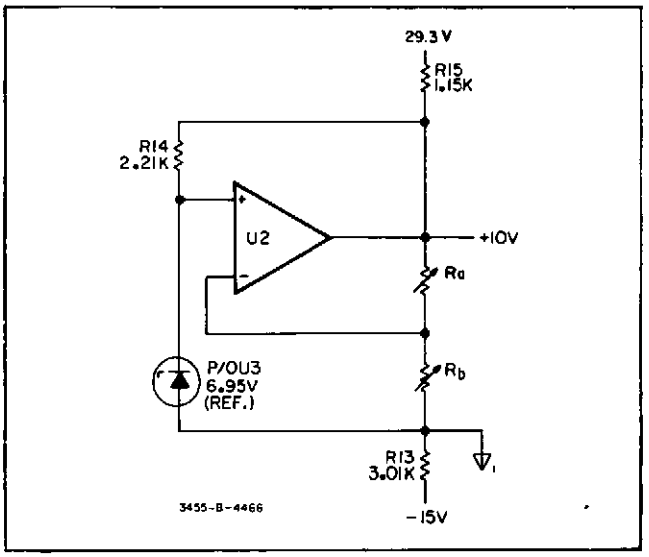

Figure 8-25. Simplified Voltage Reference Diagram.

8-82. REFERENCE ASSEMBLY.

8-83. General.

8-84. The reference assembly for the 3455A contains the components and adjustments for the ohms converter reference resistance, the precision ten-to-one divider, and the + 10 V dc reference voltage. The reference assembly is designed to be removed from the Multimeter for calibration and contains all adjustments for the DCV and OHMS functions.

8-85. Circuit Description.

8-86. The ohms reference circuit is an adjustable resistive network which supplies a precise 1 kilohm or 1 megohm reference. The precision ten-to-one divider is an adjustable resistance divider used to produce the 1 volt reference voltage and a precise ten-to-one division for use in the operational attenuator and DC preamp feedback circuitry. Figure 8-25 shows a simplified diagram of the reference voltage circuit. The reference for this circuit is a package which contains a reference diode and heater plus associated circuitry. An operational amplifier (U2) provides the necessary gain to supply a stable + 10 V dc output. Resistors R_a and R_b form a voltage divider to provide the proper feedback for the operational amplifier. These resistors are a fine-line circuit contained in an IC package and are composed of the basic resistances plus padding resistors to match the divider to the particular reference diode. Resistance R_a also includes a potentiometer which is used as the "fine" adjustment for calibrating the + 10 V dc output. The circuit is returned to the - 15 volt supply to reduce ground currents.

8-87. ANALOG-TO-DIGITAL CONVERTER (A/D).

8-88. General.

8-89. The 3455A Multimeter uses a multi-slope integration technique to convert analog input signals to digital information. This method permits relatively high speed, high accuracy measurements. The following explanation of the A/D Converter operation uses the integrator output waveform pictured in Figure 8-26. The waveform shown is for a negative input voltage. For positive inputs the integrator output would range between 0 and - 10 volts. This waveform can be divided into three major portions: the integration period (time T_1), the run-down period (time T_2) and the auto-zero period (time T_3). During time T_1, the input voltage is integrated and the most significant digits of the output reading are determined. During time T_2 the input voltage is removed and the charge remaining on the integrator capacitor is used to determine the least significant digits of the output reading. During time T_3, the integrator is reset to approximately 0 volts and readied for the next reading. At time $T_\emptyset$, the input voltage from the DC Preamp is applied to the A/D converter and causes the integrator capacitor to charge (period tc_1). The rate at which the integrator capacitor charges depends upon the amplitude of the input voltage applied (see Figure 8-27). If the voltage at the output of the integrator reaches plus or minus 10 volts the 10 V comparator is enabled and interrupts the inguard controller. The controller switches in a reference current opposite in polarity amount of time (period td) and causes the integrator to discharge. At the end of period td, the reference voltage is removed allowing the integrator to again charge (period tc). This charge, discharge sequence may be repeated throughout integration period T_1.

8-90. The period during which the digital counters are "counting" occurs during the td cycles. The total number of "counts" is therefore dependent upon the number of td

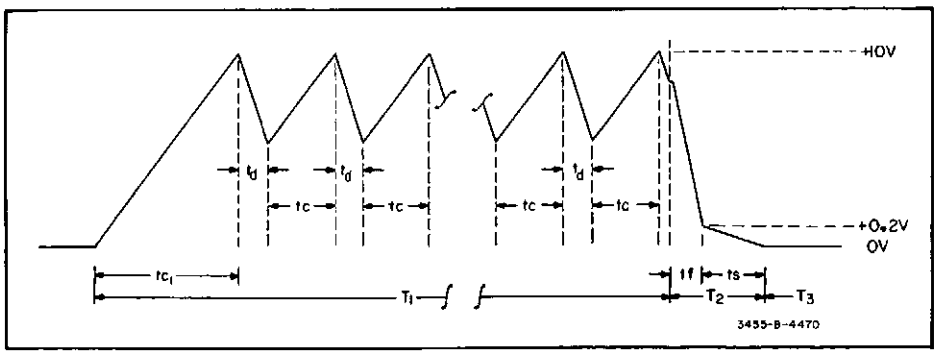

Figure 8-26. Integrator Output Waveform.

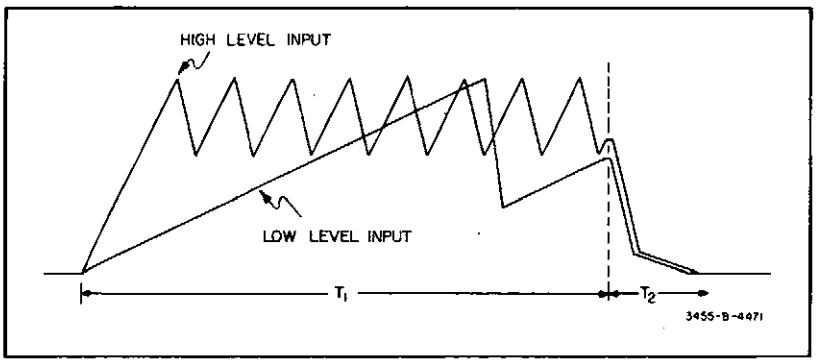

Figure 8-27. Integrator Output Waveforms for Different Input Voltage Levels.

cycles. The number of charge-discharge cycles depends upon the input voltage applied (as shown in Figure 8-27) and whether the voltmeter is in the 5 or 6 digit readout mode. For the 5 digit mode, time T_1, is 1/60 second (1/50 second for 50 Hz operation) and approximately 16 charge-discharge cycles occur for a full scale input. During 6 digit operation, time T_1 is increased to 8/60 second (8/50 second for 50 Hz operation), allowing approximately 127 charge/discharge cycles to occur for a full scale input.

8-91. At the end of time T_1, the input voltage is removed and the reference voltage applied. The integrator is quickly discharged at a fixed rate to approximately 0.2 volts (period t_f). During period t_s the discharge rate is slowed to allow accurate zero detection (point of complete discharge). This type of run-down permits both speed and accuracy. The "counts" accumulated during the run-down period (T_2) are scaled and added to those made during time T_1 for the final measurement.

8-92. Circuit Description.

8-93. Input and Reference Switching. The A/D input and reference switching is controlled by the inguard controller. The input from the DC Preamp is applied to the integrator input through a 19.8 kilohm resistor (R15) and FET switch Q3. The integrator charge current due to the input voltage is established by R15 and is equal to the input voltage divided by 19.8 kilohms. FET switch Q3 is closed throughout the integration period (time T_1, Figure 8-26) and is open during periods T_2 and T_3.

8-94. There are four separate current references in the A/D Converter. Two of these are positive references and are used when the A/D input voltage is negative. The other two references are negative references and are used for positive inputs. In Figure 8-28 the positive references are shown above the integrator input line and the negative references

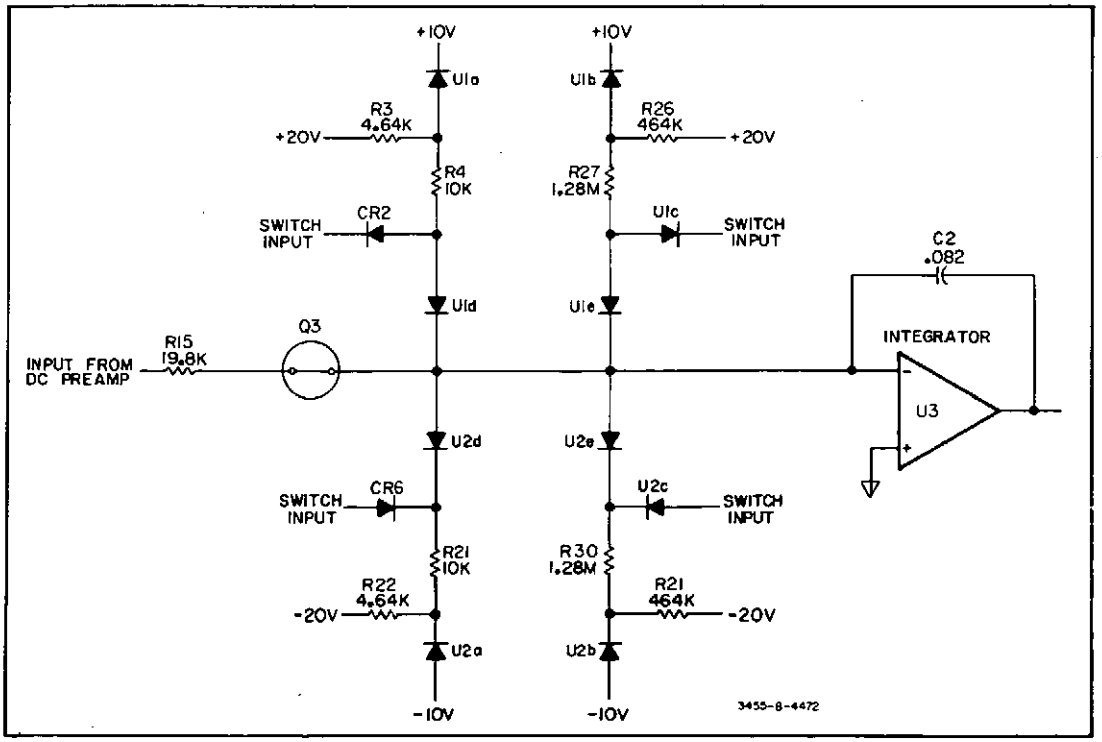

Figure 8-28. Simplified A/D Input and Reference Switching Diagram.

are below. Both the positive and negative references have a "fast" discharge reference and a "slow" discharge reference. The fast discharge references are used during the td cycles of the integration period to discharge the integrator and are also used for the "fast run-down" period (time t_f). The "slow" discharge references are used during the "slow run-down" period (time t_s) only. Diodes are used to switch the references because of their high speed switching ability. The following description uses the positive "fast-discharge" reference, consisting of U1a, R4, CR2 and U1d, to explain the reference switching operation. Except for different input levels to the negative reference switches, operation of all reference switching is identical.

8-95. During the time the switch is turned "off", diode CR2 is forward biased by approximately - 2 V dc on the cathode. Current flows from the + 20 volt supply through R4 and CR2. Under this condition the voltage at the anode of U1d is negative (approximately - 1.5 V dc) which reverse biases U1d, holding it off. (The cathode of U1d is held at virtual ground by the integrator.) During the "on" condition, CR2 is reverse biased by applying approximately + 3 V dc to the cathode. Diode U1d becomes forward biased and allows the current to flow through R4 to the integrator input. The purpose of diode U1a is to compensate for the voltage drop across switching diode U1d by raising the reference voltage by one diode drop. The reference current is determined by the voltage across R4 (10 V dc/10 kilohms = 1 mA).

8-96. Integrator. The voltmeter uses a conventional integrator circuit with a dual FET input stage for isolation. Operational amplifier U3 provides the gain necessary to keep the input voltage at 0 V (see Figure 8-29).

8-97. Slope Amplifier. The purpose of the slope amplifier is to increase the speed of the "auto-zero" function and reduce sensitivity to offsets in the zero detect comparator. The slope amplifier is a conventional non-inverting operational amplifier with a gain of 100 and is used to drive the auto-zero circuitry and zero detect comparator. Sensitivity at the output of the integrator is approximately .5 millivolts per count of output reading.

8-98. Auto-Zero. The purpose of auto-zero is to reset the integrator to a known level. During this mode of operation FET switch Q4 is closed, completing the auto-zero loop through slope amplifier U4. The integrator capacitor (C2) is used as the auto-zero capacitor and stores a charge equal in amplitude and opposite in polarity to any offsets in the integrator and slope amplifier circuits. This charge effectively cancels the offset errors generated by these circuits.

8-99. Zero Detect Comparator. The output signal of the zero-detect comparator is used to determine the polarity of the output reading and which integrator discharge references to apply. The output of this circuit is approximately + 5 volts for negative inputs and near 0 volts for positive inputs to the A/D Converter.

8-100. Absolute Value Amplifier. As the name implies, the absolute value amplifier is a unity gain circuit which produces a positive output for either a positive or negative input. During positive inputs, the negative output of U5 forward biases transistor Q6 allowing it to conduct. For negative inputs transistor Q6 is biased off and amplifier U5 conducts through diode CR12.

8-101. 10 volt Detect Amplifier. The purpose of the 10 volt Detect Amplifier is to detect when the charge on the integrator has reached plus or minus 10 volts. This information is used by the inguard controller in determining when to apply the discharge references during the integration per-

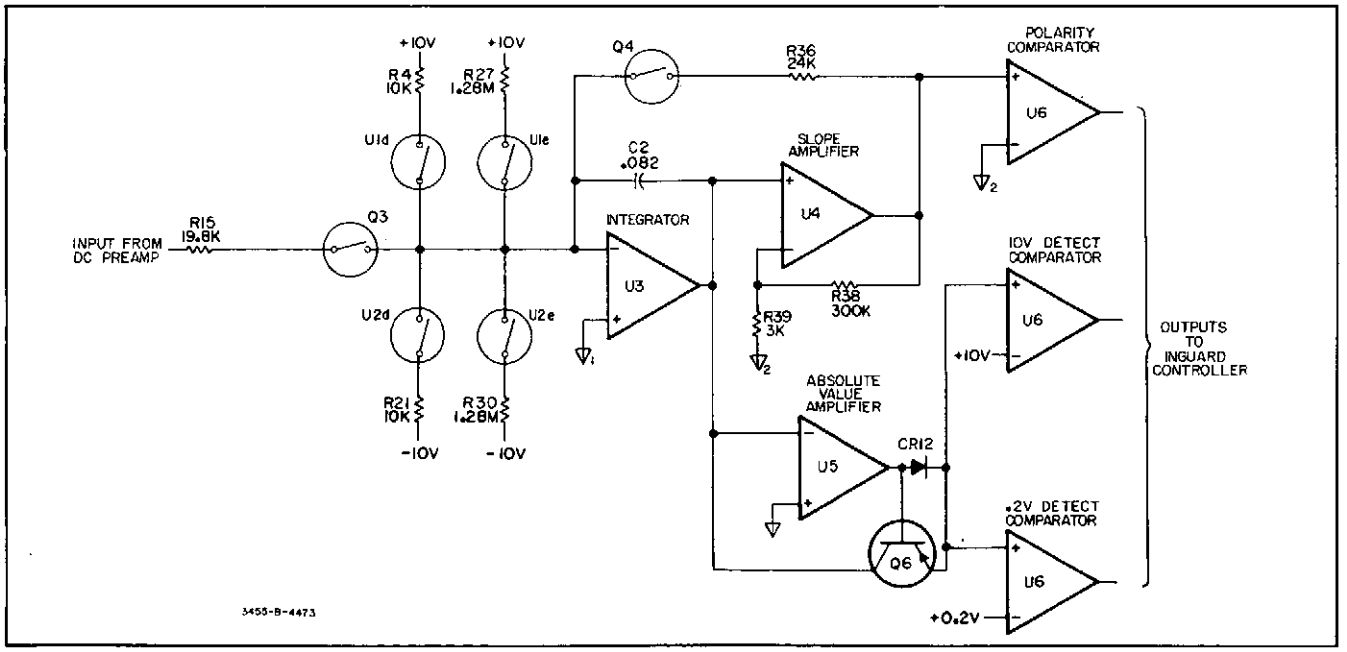

Figure 8-29. Simplified A/D Converter Diagram.

iod (time T_1, Figure 8-26). For inputs less than 10 volts the output of the 10 volt Detect Amplifier is near 0 volts. As the input reaches 10 volts the output switches to approximately + 5 volts.

8-102. 0.2 volt Detect Amplifier. The purpose of the .2 volt Detect Amplifier is to detect when the integrator has discharged to approximately .2 volts during period T_2 (Figure 8-26). This information is used by the inguard controller in determining the point to remove the "fast-discharge" reference and apply the "slow-discharge" reference.

8-103. INGUARD CONTROLLER.

8-104. General.

8-105. Figure 8-30 shows the basic steps performed by the inguard controller. The inguard controller receives data containing range, function, and resolution information from the main controller. This data, containing 36 bits of information and a parity bit, is transferred serially at a rate determined by the main controller. The inguard controller decodes the information, sets the input and auto-cal switches to their required states, and selects the appropriate range, function, and sample time for the resolution indicated. During the measurement process, the inguard controller manages the analog-to-digital conversion sequence and stores the digital equivalent of the A/D input voltage.

8-106. Upon completion of the measurement, the digital information is transferred from the inguard controller to the main controller. This information contains the measurement value and polarity plus a parity bit and is transferred serially at a rate determined by the main controller. The inguard controller is reset to receive more information by a reset pulse from the main controller.

8-107. Circuit Description.

8-108. Transfer Circuit. Figure 8-31 shows a simplified diagram of the data transfer circuitry between the inguard and main controllers. The direct control lines, DCØ through DC3, of the processors are used for communication. The inguard and main processors are electrically isolated by optical isolators. Control lines DCØ and DC1 are driven by the main controller. During the inguard to main transfer mode, Line DCØ is used to indicate when the main controller is ready to receive data. Control Line DC1 is used for the transfer-clock signal during both transfer modes. Control Lines DC2 and DC3 are driven by the inguard controller. Control Line DC2 is used by the inguard controller to indicate whether it is in a "send" or "receive" state. Transition from the receive to the send status indicates to the main controller when the inguard controller is ready to send data. Control Line DC3 is used by the inguard controller to indicate when it is ready to receive data during the main-to-inguard transfer mode and to send data during the inguard to main transfer mode.

8-109. Transfer signals for both data transfer modes are illustrated in Figure 8-32. During the main controller to

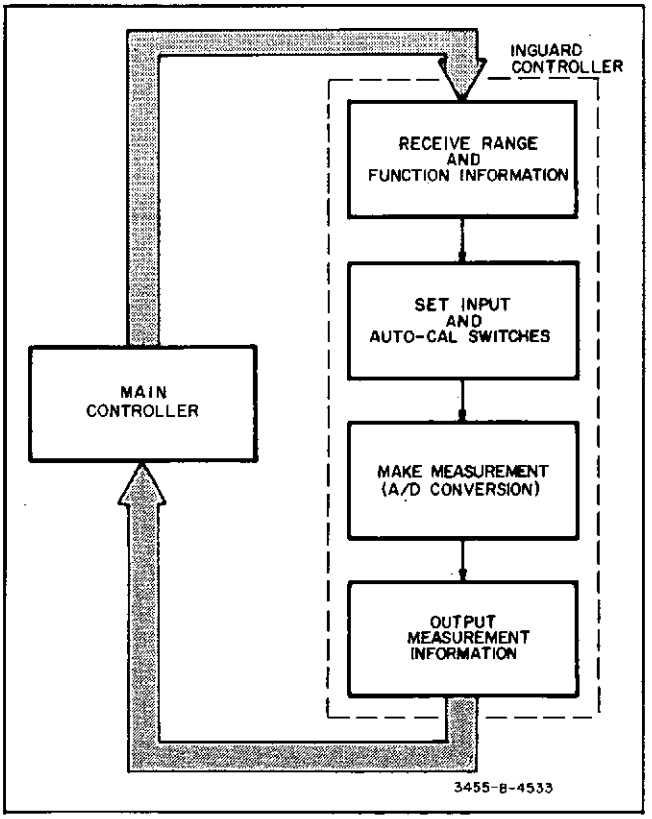

Figure 8-30. Simplified Inguard Controller Flowchart.

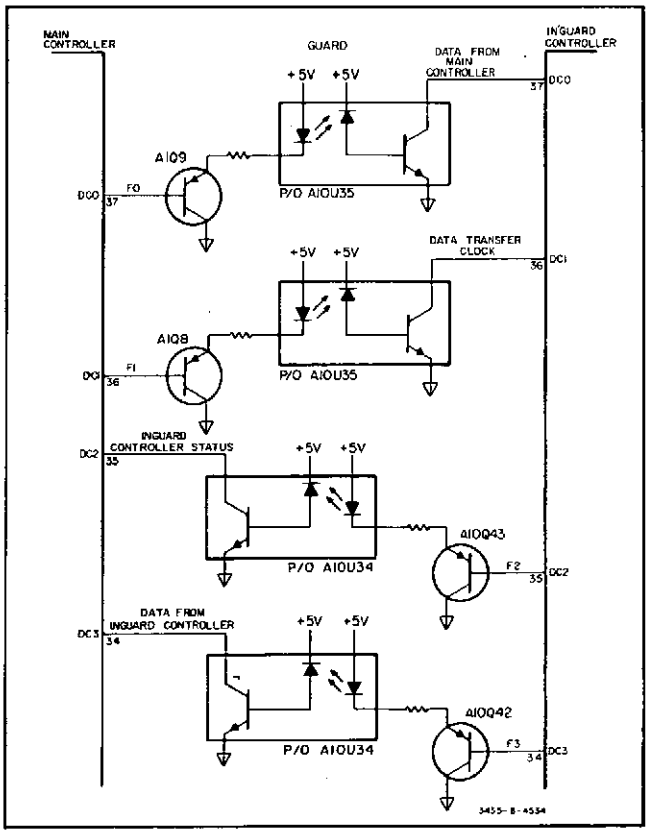

Figure 8-31. Controller Data Transfer Circuit.

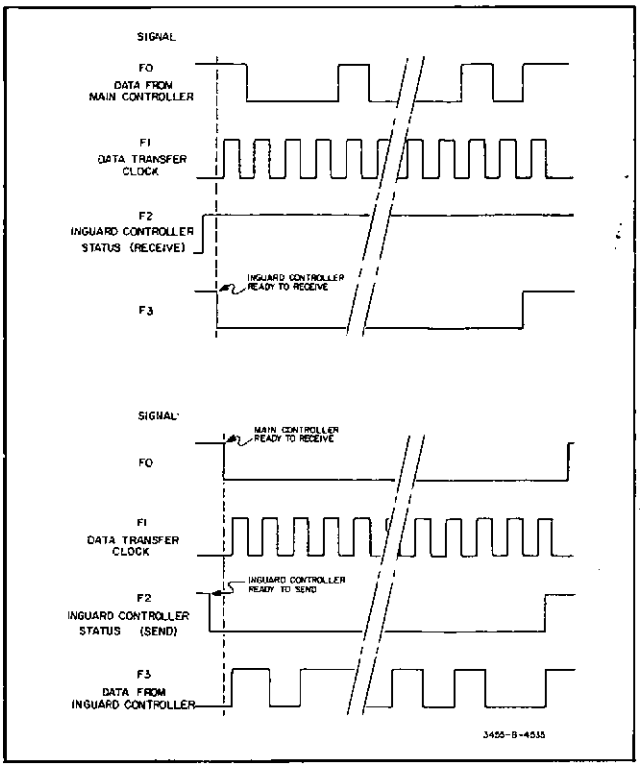

Figure 8-32. Data Transfer Signals.

inguard controller transfer mode, data is valid during the positive portions of the clock signal and changed during the negative portions. During the inguard controller to main controller transfer mode, data is valid during the negative portions of the clock signal and changed during the positive portions. The main controller transfers 37 bits of information, composed of 6 bits of trigger information, 30 bits of range and function information and a parity bit, to the inguard controller. The inguard controller transfers 25 bits of information, composed of 1 bit of polarity information, 23 bits of measurement data, and a parity bit, to the main controller.

8-110. Reset Circuit. The reset line is driven by the main controller to reset the inguard controller to the beginning of its program routine. Figure 8-33 shows a simplified schematic of the reset circuit. A pulse transformer is used to electrically isolate the reset line between the inguard and outguard sections of the voltmeter. The reset pulse applied to the preset input of flip-flop U32A sets the "Q" output high. The high output of U32A causes the output of U27B to go low. The output of U27B sets the "interrupt request" input of the inguard processor. Upon receiving interrupt request, the processor stops driving its data Lines (DØ through D7), allowing them to go high and sets the interrupt acknowledge line high. This signal allows the output of U27C to go low which puts the "start" address on that processor's data bus. The processor (after reaching its "start" address) sets the interrupt acknowledge line low to remove the output of U27C from the data bus and to reset the interrupt circuit to its normal state.

8-111. A/D Converter Control Circuitry. Figure 8-34 shows the control circuitry between the inguard processor and the analog-to-digital converter. There are six output lines from the inguard controller which control the input, reference, and auto-zero switches in the A/D Converter. Each output line controls one of the six switches in the converter. Switching information for the A/D Converter is set on the processor's data bus (outputs DØ through D5)

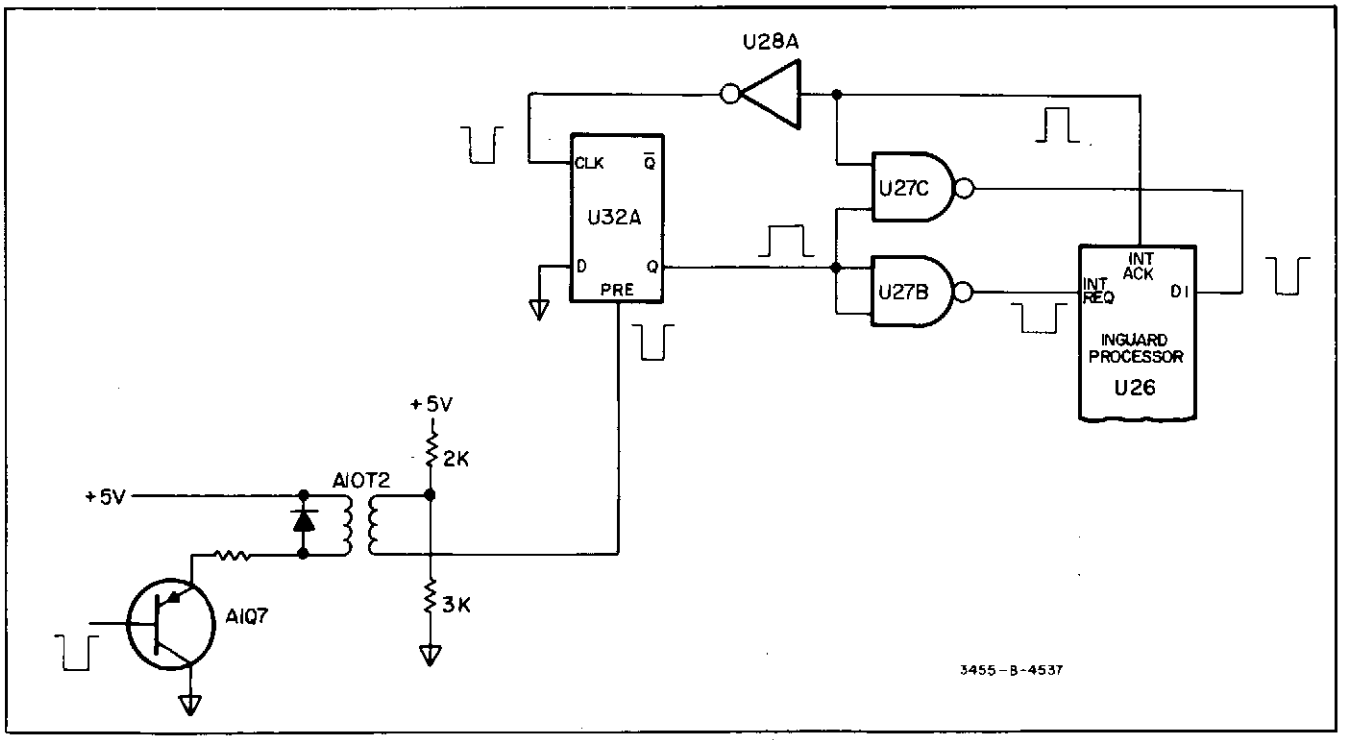

Figure 8-33. Inguard Controller Reset Circuit.

and transferred to the converter through output latch U15. Table 8-2 describes the purpose of each of the A/D Converter switch signals and the "true" state of each. The three "detect" outputs of the A/D Converter are returned to "direct control" lines DC4 through DC6 of the processor.

8-112. The "polarity detect" output of the converter is also applied to the input of the "zero detect" circuit. The zero detect circuit is used to detect the end of the "slow" run-down period. At the beginning of the slow run-down period, the "Q" output of U32B is set to the same state as the polarity detect signal by a pulse from U14. The interrupt enable signal from the processor is set high to enable the zero detect circuit. As the charge on the A/D Integrator passes through 0 volts, the polarity detect signal changes state and causes the output of the zero detect circuit to go low. The low output from the zero detect circuit sets the processor's interrupt input to stop the A/D Conversion process. Upon completion of the A/D Conversion process, the processor sets the interrupt enable signal low to disable the zero detect circuit.

Table 8-2. A/D Converter Switch Control Signal Descriptions.

Signal	Description	True State
LVIN	A/D Converter input switch signal (A14Q3)	Low
LNRS	Negative slow-discharge reference switch signal (A14U2c)	Low
HPRS	Positive slow-discharge reference switch signal	High
HAZ	Auto-zero switch signal (A14Q4)	High
HPRF	Positive fast-discharge reference switch signal (A14CR2)	High
LNRF	Negative fast-discharge reference switch signal (A14CR6)	Low

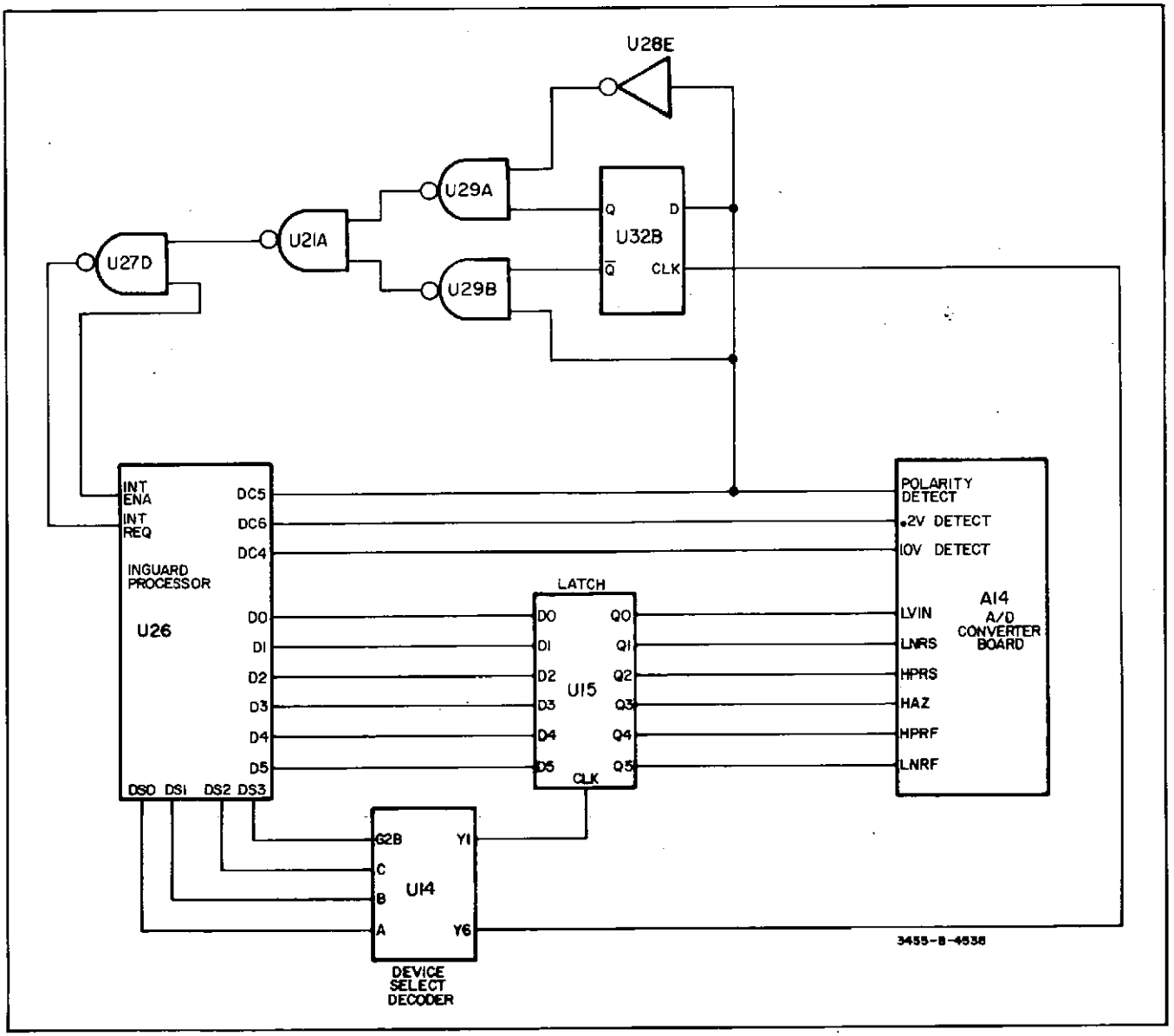

Figure 8-34. Simplified A/D Converter Control Circuit.

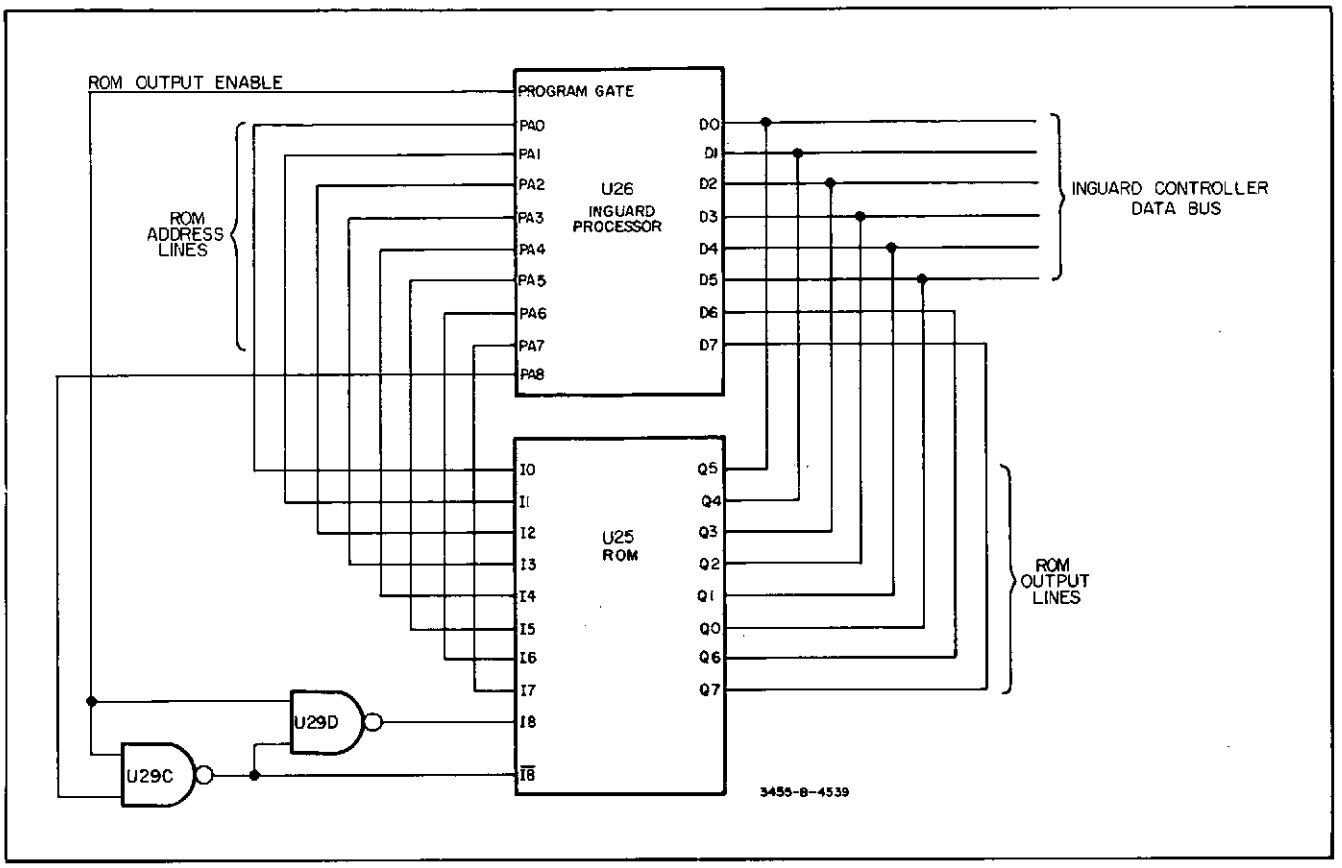

Figure 8-35. Simplified Program ROM Circuit.

8-113. Program ROM. Figure 8-35 shows a simplified schematic diagram of the program ROM circuitry used in the inguard controller. The program ROM contains the operation instructions for the inguard controller routine. There are 512 eight bit program storage locations contained in the ROM which are addressed by nine input lines (I$\emptyset$ through I8). The ROM output is connected to the processor data lines D$\emptyset$ through D7. The output of the ROM is enabled only when the signal level applied to $\overline{I8}$ is the complement of the level applied to I8. This function is accomplished by gates U29C and U29D and occurs when the processor sets the "program gate" signal high.

8-114. Output Circuit. The output circuit of the inguard controller controls all inguard switching of the voltmeter. Switch control signals are transferred through six latches (see Figure 8-36). Each latch is set individually to output the proper switch signals. The inguard processor sets the switching information for the latches on the data bus (processor output D$\emptyset$ through D5) and the select code for the particular latch to accept the information on device select lines DS$\emptyset$ through DS3. Transfer of information from the processor to the latches is synchronized by the clock input to the processor and the device select decoder U14.

8-115. MAIN CONTROLLER.

8-116. General.

8-117. The purpose of the main controller is to control communication between the front panel, HP-IB interface, display and inguard section of the multimeter and to perform mathematical calculations to correct measurement data and provide measurement scaling or percent error readings. The following is an explanation of the operations performed by the main controller as illustrated in Figure 8-37.

a. The main controller reads and stores the status code of the front panel switches (local operation) or HP-IB buffers (remote operation) to determine measurement parameters, such as range, function, mode, and sample time.

b. Using the status information, the main controller generates switching information for the analog section and transfers this information to the inguard controller.

c. During the time the inguard controller is setting the switches and making the required measurements, the main controller computes the constants used to correct the measurement data. This step is shown in Figure 8-37 as "perform preliminary math calculations" and involves combining the offset error and full scale error readings, relevant to the measurement being made, into two constants.

d. The main controller receives the measurement data from the inguard controller, applies the correction factors found in the previous step and computes the corrected measurement answer.

e. The main controller next checks to see if one of the math functions have been selected. The math functions provide either a scaled answer $(\frac{x-z}{y})$, where x is the measurement answer and y and z are values entered by the operator, or a percent error answer $(\frac{x-y}{y} \times 100)$, where x is the measurement answer and y is a reference value entered by the operator. If the math function has been selected, the main controller computes the math answer.

f. The main controller next checks to see if the HP-IB buffers are active (outputting data to the bus). If the HP-IB buffers are not active, the main controller loads the answer into them. If the buffers are active the controller bypasses this step.

g. The main controller loads the final answer in the display buffers and returns to the start of the program.

8-118. Circuit Description.

8-119. ROM Circuit. The main controller uses three ROM's to store the programs necessary to control the various functions and operations of the voltmeter. Each ROM is capable of storing 2048, eight bit "words" of program information and is divided into two "pages" of 1024 words

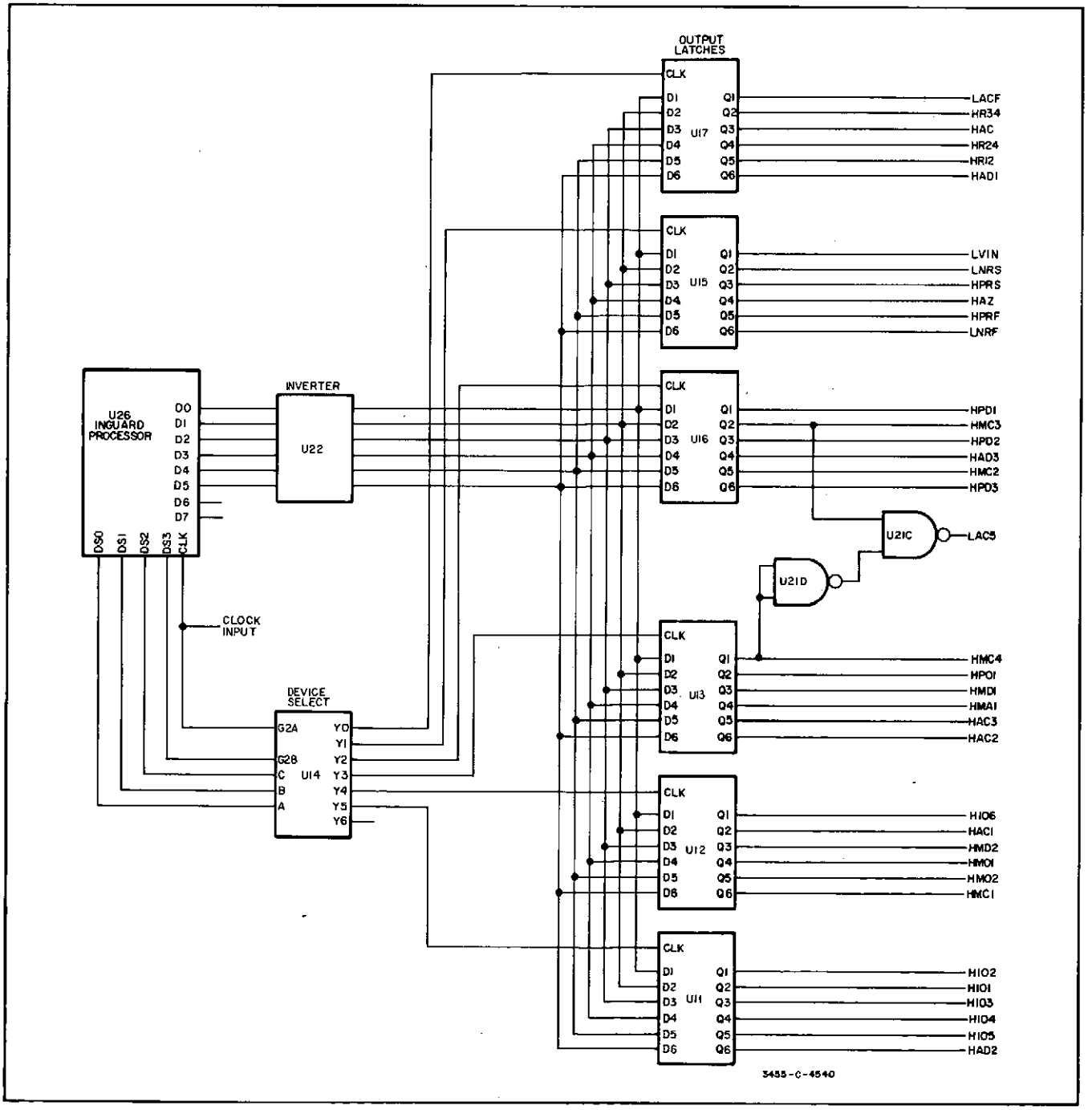

Figure 8-36. Simplified Output Circuit.

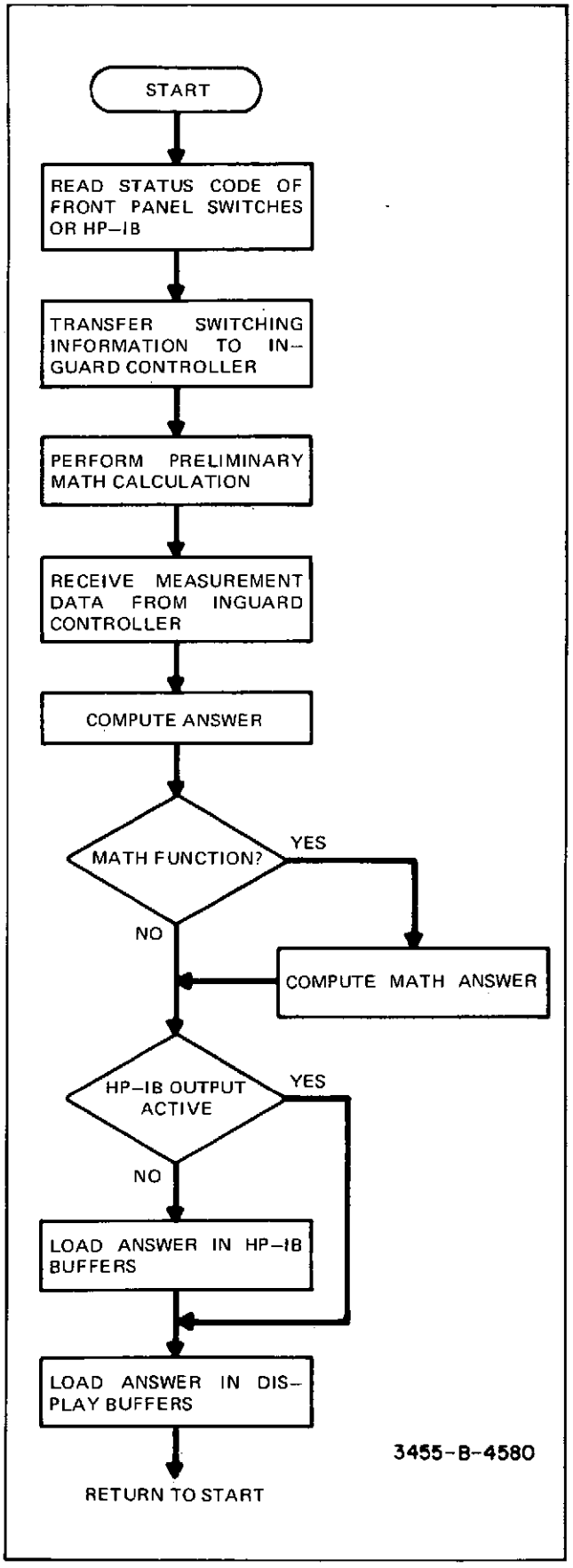

Figure 8-37. Simplified Main Controller Flowchart.

each. Five of the six pages contain the programs necessary for the normal operation of the voltmeter while the sixth page contains a test program to aid in troubleshooting and to verify proper operation. This test feature is not programmable from the front panel. The ROM's are addressed by the main processor through the program address bus (processor outputs PAØ through PA9). The program information is sent to the processor through the processor data bus (lines DØ through D7). All ROM's receive the address information. The particular program information received by the processor is determined by the program address code, the page select signal, and which ROM is enabled.

8-120. Figure 8-38 is a schematic of the ROM circuitry. During normal operation, the test connector J1 is connected as shown. This connection disables the upper page (test program) or ROM U8 and allows ROM's U6 and U7 to be enabled. Removing the jumper permits only the upper page (test program) of U8 to be enabled. Connecting the jumper between ground and the "disable" connection disables all ROM outputs to aid in testing the main processor.

8-121. During normal operation, the ROM's are enabled in the following manner. At turn on, only the lower page of U8 may be enabled. This is because the normal turn on state of address line PA10 is low which allows U8 to be enabled and "holds off" the enable circuitry for ROM's U6 and U7. To enable ROM's U6 or U7, the following sequence is used.

a. The code to select the desired ROM and page is set on data lines DØ and D1. Line DØ is used to select the page and is set high for upper pages and low for lower pages. Line D1 is used to select the particular ROM and is set high to select ROM U6 or low to select U7.

b. The device select code to select output Y5 of U31 is set on device select lines DSØ through DS3.

c. Address line PA10 is set high to disable ROM U8 and allow ROM's U6 and U7 to be addressed.

d. The READ/WRITE line is set high (write).

The above outputs are synchronized by the clock signal. The combination of the output from the device select decoder U33 and the WRITE output from the processor causes a pulse at the clock input of U5 and sets the Q1 and Q2 outputs to the levels of data lines DØ and D1 (page and ROM select data). Once U5 is set the processor data lines (DØ through D7) and READ/WRITE line are released for other operations. Address line PA10 remains high as long as ROM U6 or U7 are to be addressed. The output of the ROM and page selected is then enabled when the Program Source Gate is set high. To return to the lower page of U8 it is only necessary to set address line PA1Ø low.

8-122. At the beginning of an "interrupt sequence" the processor enables gates U3A and U3B by activating output Y5 of the device select decoder and setting the READ/

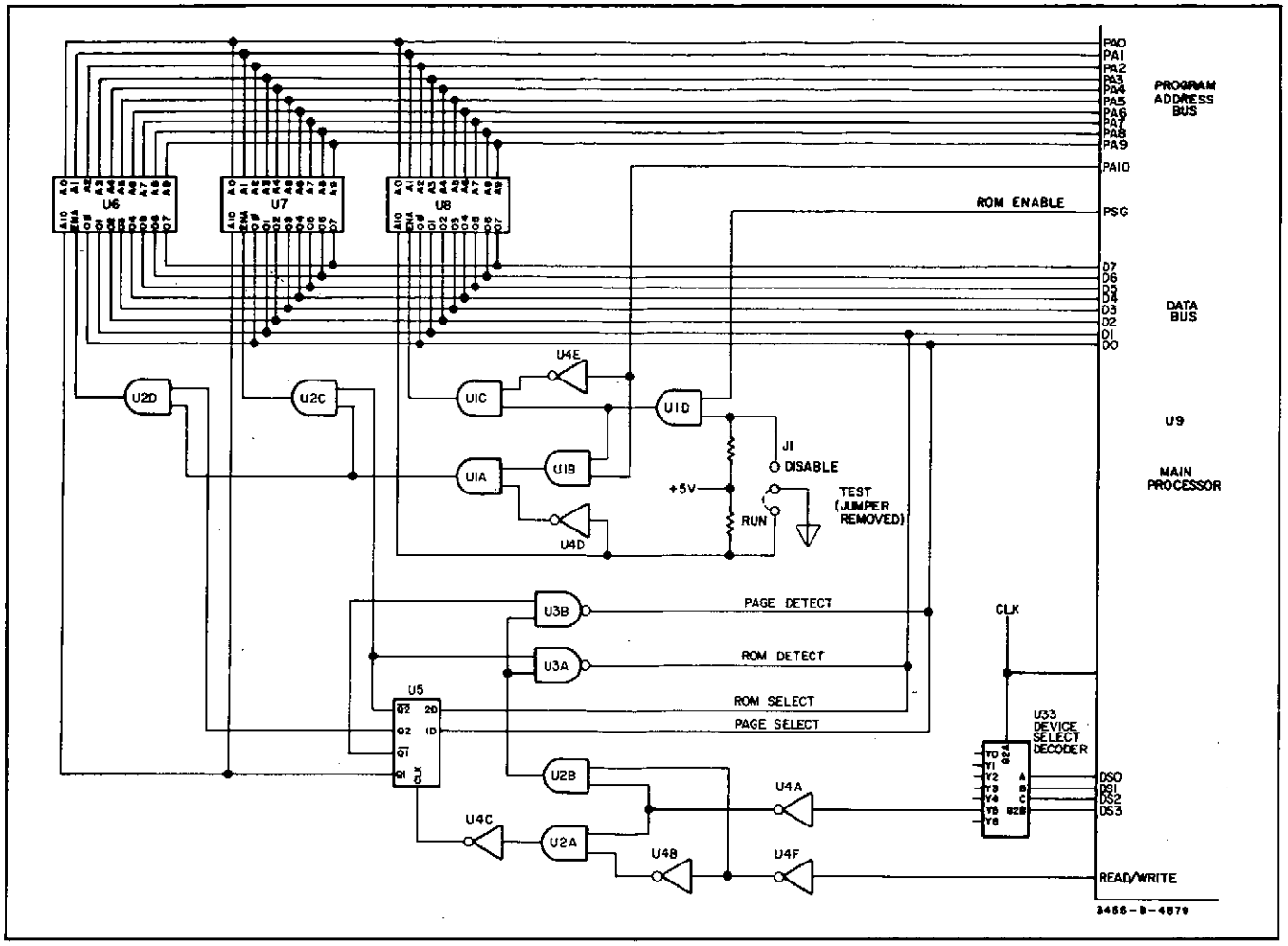

Figure 8-38. Main Controller ROM Circuit.

WRITE output low (READ). The outputs of U3A and U3B are then sent to the processor through data lines DØ and D1 and represent the page and ROM that was active at the time of interrupt. The ROM and page information along with the address code are stored by the processor so that after the interrupt routine it can return to that step in the program.

8-123. RAM Circuit. The RAM's are used to store temporary data such as auto-cal constants, display data, front panel and HP-IB status codes, math computations and references, and control status codes. Figure 8-39 is a schematic diagram of the main controller RAM circuit. The RAM's can be set to a particular address by the main processor or are automatically incremented to the next memory address each time data is stored or read. This method allows groups of data to be transferred between the RAM's and main processor without having to address each step and results in higher operating speed.

8-124. The RAM's are addressed by the main processor in the following manner:

a. The processor sets the desired address code on data lines DØ through D7, sets the proper code on the device select lines (DSØ through DS3) to activate output Y4 of device select decoder U41, and sets the Read/Write output high (write).

b. The outputs of the processor and the device select decoder are synchronized by the clock signal.

c. The Read/Write signal enables buffers U34 and U42 to apply the address code to the inputs of presettable counters U36 and U37.

d. The negative-going pulse from output Y4 of device select decoder U41 is applied, through gates U38B and U38D, to the "load" inputs of U36 and U37 to load the address code into them. The code which has been loaded into the presettable counters is then applied to the address inputs (lines AØ through A7) of the RAM's (U44 and U45 U45).

8-125. Data is stored in the RAM's as follows:

a. The processor sets the data to be stored on data lines DØ through D7, sets the proper code on device select lines DSØ through DS3 to activate output Y1 of device select decoder U41, and sets the Read/Write output high (write).

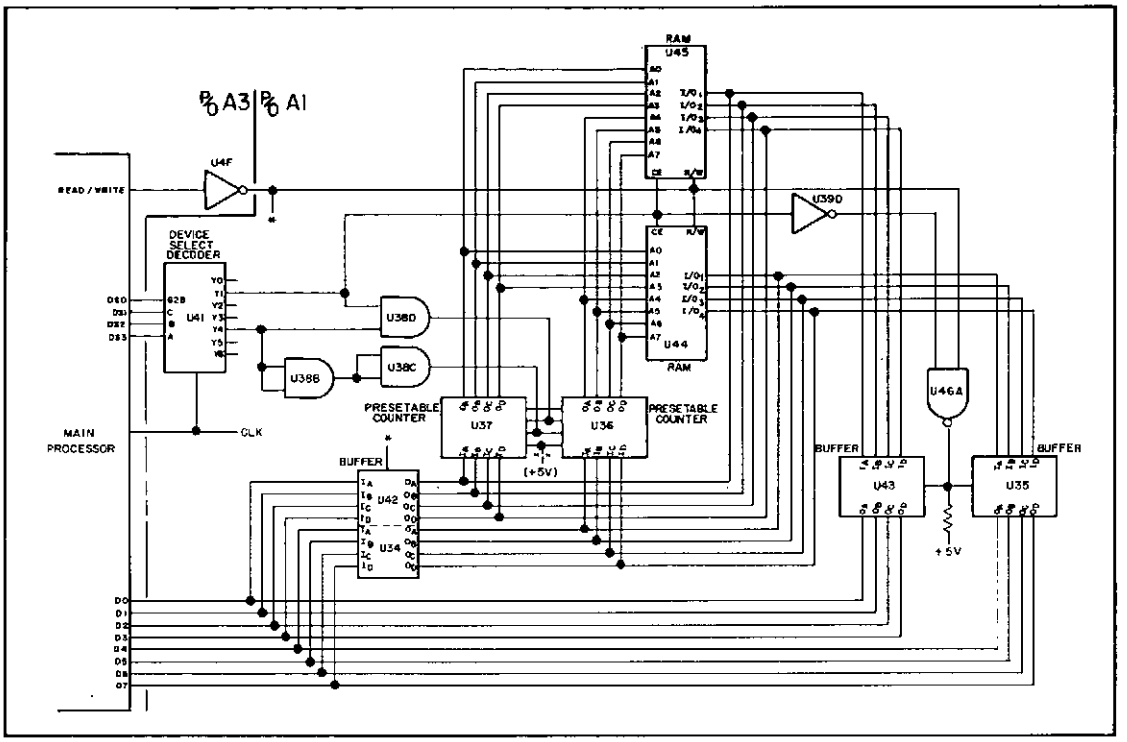

Figure 8-39. Main Controller RAM Circuit.

b. The Read/Write signal enables buffers U34 and U42 to apply the data to the RAM's I/O lines and is also applied to the R/W input of the RAM's to enable the write amplifiers. The negative-going pulse from output Y1 of U41 is applied to the CE inputs of the RAM's to enable them to store the data. Output Y1 of U41 is also applied to the "clock" inputs of U36 and U37 (through U38) to increment the address code by one upon completion of the "store" operation.

8-126. The processor "reads" data from the RAM's as follows.

a. The processor sets the code necessary to activate output Y1 of U41 on device select lines DSØ through DS3, and sets the Read/Write line low (read).

b. The Read/Write signal is inverted by U4F and applied to the RAM's R/W input to enable the output buffers. The negative-going pulse from output Y1 of U41 is applied to the CE input of the RAM's to enable their outputs. The RAM output data is applied to the inputs of buffers U35 and U43 which are enabled by the low output of gate U46A.

c. The data is read by the processor on data lines DØ through D7.

d. As with the "store" sequence, the negative pulse from output Y1 of the device select decoder is applied, through gate U38D, to the "clock" input of counters U36 and U37 to increment them to the next address.

8-127. ALU Circuit. The Arithmetic Logic Unit (ALU) provides added computational capability to the main controller for computing Auto-Cal constants, measurement data corrections, and "scale" and "% error" math functions. The ALU also provides logic functions which are used for certain control operations. The ALU performs Arithmetic or Logic operations on two, 22 bit binary numbers in eight bit segments starting with the eight least significant bits.

8-128. Figure 8-40 shows a schematic diagram of the ALU circuit used. The numbers to be entered into the ALU's are 8 bit binary codes and are entered as follows:

a. The processor sets the numerical data on data lines DØ through D7, sets the READ/WRITE line high (write), and sets the device select lines DSØ through DS3 to the code necessary to activate the proper output of device select decoder U33 (output Y1 for number "A", Y2 for number "B").

b. The outputs of the processor and device select decoder are synchronized by the clock signal.

c. The READ/WRITE signal enables buffers U34 and U42 to apply the binary information from the processors data output to the ALU input latches. The information is set in latches U29 and U31 (number "A") or U24 and U25 (number "B") by the signal from device select decoder U33.

d. The ALU operation instruction is a 6-bit binary code

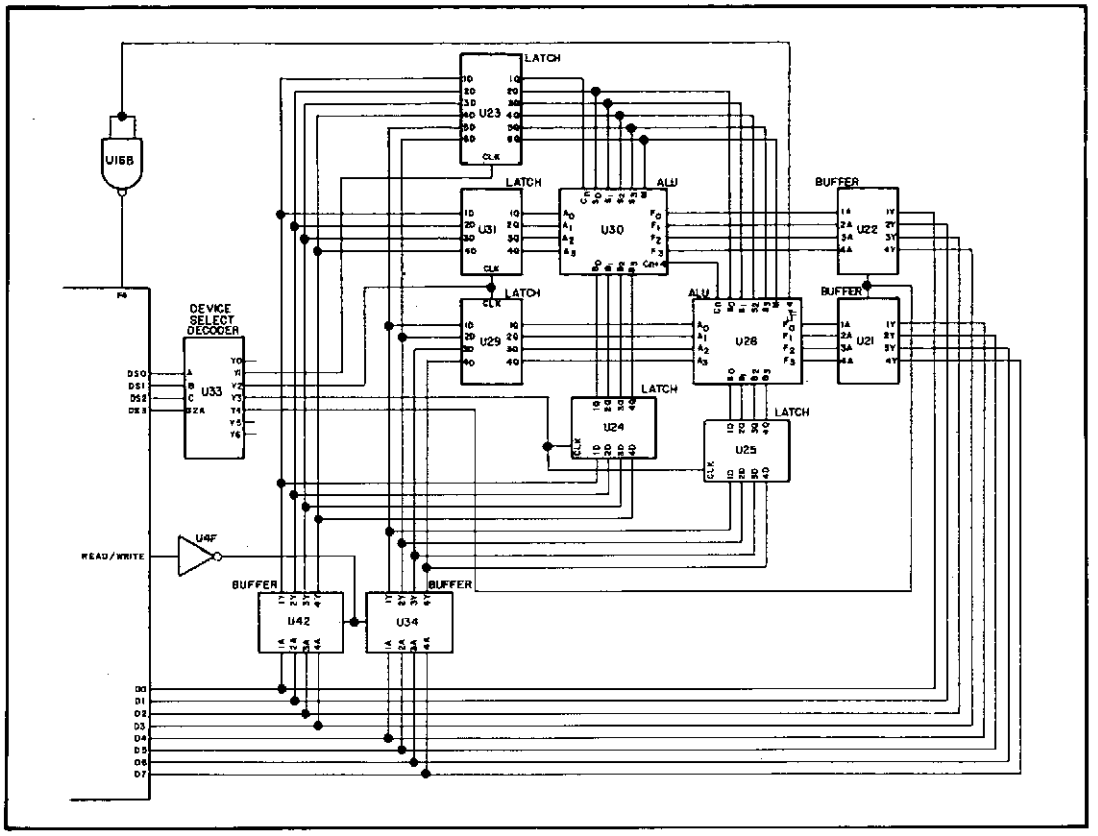

Figure 8-40. Main Controller ALU Circuit.

composed of a 4-bit instruction code, 1 bit of mode information to determine whether the operation is to be an arithmetic or logic function, and 1 bit of "carry" information.

e. The operation instruction is entered into the ALU's in the same manner as the numerical data except, only processor data lines DØ through D5 are used to output the data.

8-129. The output of the ALU's is read by the processor in the following manner:

a. The processor sets the READ/WRITE line low (READ) to disable buffers U34 and U42 and sets the proper code on device select lines DSØ through DS3 to activate output Y4 of U33.

b. Output Y4 of U33 enables the ALU output buffers U21 and U22 and the data is read by the processor on data lines DØ through D7. In the event that a "carry" occurred during the ALU operation, the carry output (CN + 4) of U28 is output through gate U16B to set F4 of the processor.

8-130. Interrupt Circuit. The Interrupt Circuit is used to signal the main processor when the front panel switch data has been changed, when an external trigger has been applied, when the HP-IB (Hewlett-Packard Interface Bus) needs service, or at "turn-on". The Interrupt Circuit is also used to strobe the front panel display. The Interrupt Circuit has been designed so that the Interrupt Signals are assigned priorities. In the event of two or more Simultaneous Interrupt Signals, the one with the highest priority will be handled first. The HP-IB Interrupt is assigned the highest priority and will be serviced before the external trigger or front panel interrupts. The external trigger interrupt is assigned the second highest priority and will be serviced before the front panel interrupt. All three interrupt signals have priority over the display strobe signal. The turn-on interrupt occurs only at initial turn-on of the voltmeter. Figure 8-41 is a simplified schematic of the Main Controller Interrupt Circuit.

8-131. HP-IB Interrupt. When the HP-IB requires service, it sets the HP-IB Interrupt signal high. This signal is applied to the input of U53B. The output of U53B is applied to U47B to disable the front panel interrupt circuit and through U52A to the interrupt gates which set the processors interrupt input. The HP-IB interrupt input is also applied to U46D to set the interrupt address. Upon recognizing the interrupt input, the processor sets the interrupt enable low, to remove the interrupt input, and sets the interrupt acknowledge high, to enable address gates U47D and U46D. The address gates set the interrupt address on the processors data bus. It is possible for both the external trigger interrupt and the HP-IB interrupt to occur simultaneously and set their respective interrupt address code on the processor data bus. When this occurs, the processor is programmed to vector to the HP-IB Interrupt address to main-

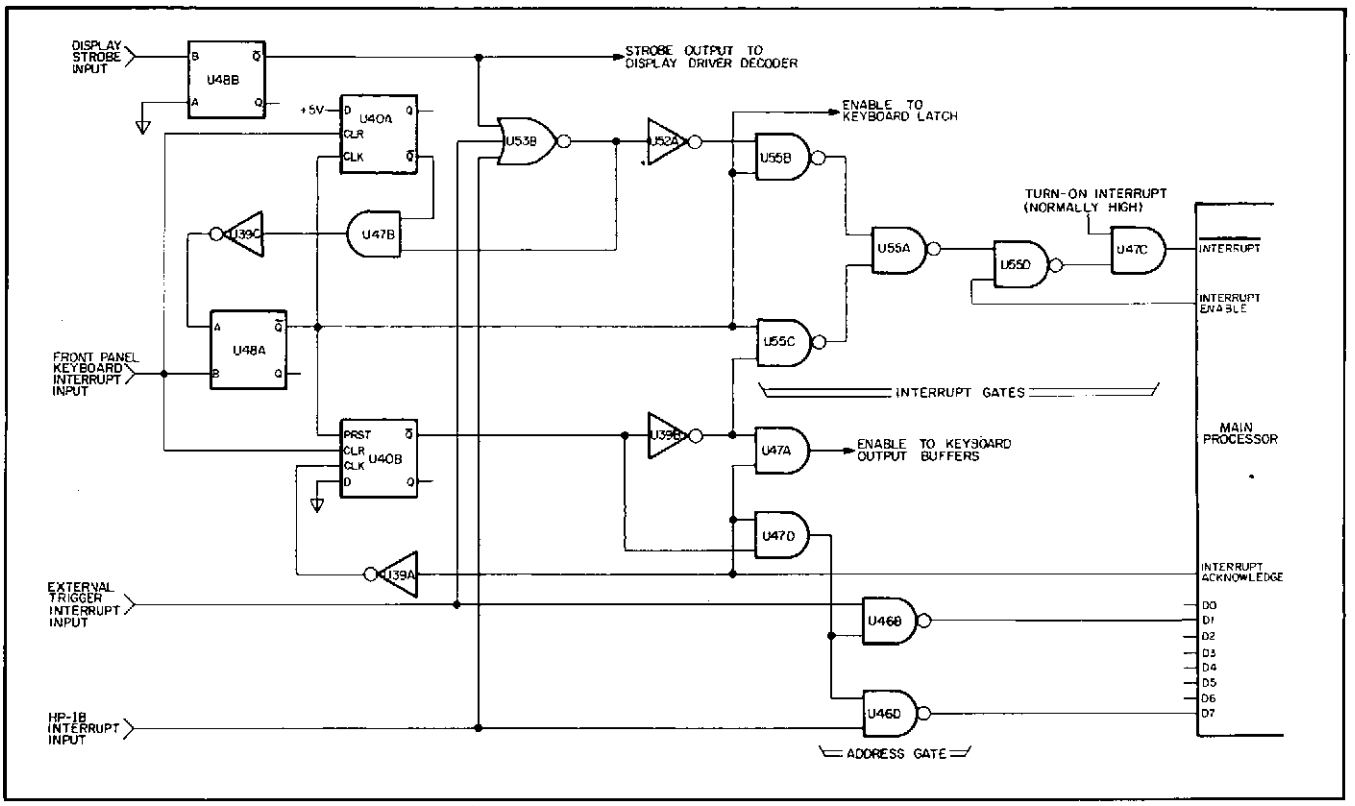

Figure 8-41. Main Controller Interrupt Circuit.

tain priorities. After accepting the interrupt address, the processor sets the interrupt acknowledge line low to disable address gates U46B and U46D. The processor then services the HP-IB to clear the interrupt input.

8-132. External Trigger Interrupt. Operation of the External Trigger Interrupt is the same as the HP-IB Interrupt with the exception of the interrupt address gate activated. During External Trigger Interrupt, address gate U44B is used to set the interrupt address on the processor's data bus.

4-133. Front Panel Interrupt. When the status of the front panel switches is changed, the switch status interrupt signal is set high. This removes the "clear" signals from U40A and U40B and triggers the monostable multivibrator U48A. The output of the multivibrator is a negative pulse approximately 6 milliseconds in duration. This negative signal is applied to interrupt gates U55B and U55C to disable the interrupt input to the main processor. This insures that the processor is not interrupted by the other interrupt signals while the front panel is being serviced. The negative output of U48A is also applied to the "preset" input of U40B to set output $\overline{Q}$ low. Output $\overline{Q}$ of U40B is applied to U47D to disable the interrupt address gates and through U39B to set the inputs of U47A and U55C high.

8-134. As the output of multivibrator U46A returns high, the following occurs:

a. The front panel output latch is set to the new switch status code.

b. The positive-going signal is applied to the "clock" input of U40A to set the $\overline{Q}$ output low. This signal, applied through U47B and U39C, disables the input of U48A to prevent premature retriggering.

c. Interrupt gate U55C is enabled to set the main processor interrupt input.

8-135. Upon recognizing the interrupt signal, the main processor sets the interrupt enable output low to remove the interrupt signal and sets the interrupt acknowledge signal high. The interrupt acknowledge signal enables gate U47A which enables the front panel output buffers allowing them to set the new switch status code on the processor's data bus (DØ through D7).

8-136. Upon accepting the switch status information, the processor sets the interrupt acknowledge signal low. This signal is applied to U47A to disable the front panel output buffers and through U39A to the clock input of U40B to set the $\overline{Q}$ output high. This removes the disable from U47D and applies a disable signal to U55C and U47A.

8-137. When the front panel switch is released, the front panel interrupt signal is set low. This resets the trigger enable input of U48A and sets the "clear" inputs of U40A and U40B to return the circuit to its "ready" state.

8-138. Display Strobe Circuit. When no interrupts are present, the interrupt circuit is used in the display function of the voltmeter. Monostable multivibrator U48B is triggered

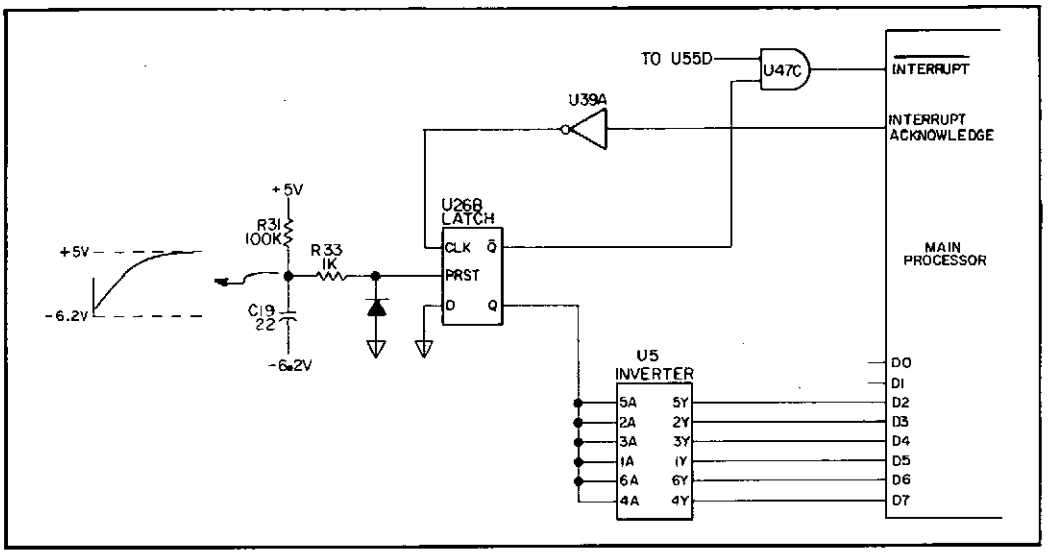

Figure 8-42. Simplified Turn-on Interrupt Circuit.

by output Y2 of device select decoder U41. The output of U48B is a negative pulse approximately 1 millisecond in duration and is applied to the strobe inputs of the display driver decoder to enable it. As the output of U48B returns high, gate U53B is enabled. The low output of U53B is applied through U52A to the interrupt gates to set the processor's interrupt input of the processor. Upon noting the interrupt, the processor sets the interrupt enable signal low to remove the interrupt input and sets the interrupt acknowledge high to enable the interrupt gates. The processor then checks the data bus (DØ through D7) for the interrupt address. In this case all data inputs are high which the processor recognizes as the display function interrupt address.

8-139. Turn-On Interrupt. The purpose of the "turn-on" interrupt is to start the main processor at a known program address when power is initially applied to the voltmeter. Figure 8-42 shows a simplified schematic of the turn-on interrupt circuit. At turn-on, a negative-going pulse is applied to the "preset" input of latch U26B from the RC network composed of R31 and C19. This sets the "Q" output high and the "$\overline{Q}$" output low. The $\overline{Q}$ output is applied to U47C which sets the interrupt input to the processor. The Q output is applied through inverter U5 to the processor data bus (D2 through D7) to set the starting address.

8-140. Upon recognizing the interrupt signal, the processor reads the start address from the data bus and sets the interrupt acknowledge output low. The interrupt acknowledge signal is applied through inverter U39A to the "clock" input of U26B. This sets the Q output low and the $\overline{Q}$ output high, disabling the turn-on interrupt circuit.

8-141. HP-IB CIRCUIT.

8-142. General.

8-143. The Hewlett-Packard Interface Bus (HP-IB) is a carefully defined instrumentation interface which simplifies the integration of instruments, calculators, and computers into systems. The HP-IB employs a 16-line Bus to interconnect up to 15 instruments. Normally, this Bus is the sole communication link between the interconnected units. Each instrument on the Bus is connected in parallel to the 16 Bus lines. Eight of the lines are used to transmit data while the remaining eight lines are used for communication timing (Handshake) and control. Data is transmitted on the eight data lines as a series of eight-bit characters ("bytes"). Normally, a seven-bit ASCII code is used with the eighth bit available for a parity check. Data is transferred by means of an interlocked "handshake" technique which permits asynchronous communication over a wide range of data rates. Figure 8-43 illustrates the HP-IB interface connections and overall Bus structure. Bus communication is controlled by the five general interface management (control) lines. These lines determine how information will be interpreted by devices on the Bus. The data bus (lines DIO1 through DIO8) is used to transfer information between devices on the Bus. The three data byte transfer control (handshake) lines permit synchronization of the data transfer on the data bus.

8-144. Circuit Description.

8-145. Initial Turn-On. (Refer to the HP-IB Schematic for the following descriptions.) The interface circuit is initialized by the main controller at "turn-on". After completion of the turn-on sequence and before the Bus is active the following conditions exist:

a. The outputs of latches U11, U19, U20, and U26A are low.

b. Signal inputs to buffers U15, U16, U17 and U18 are low.

c. Inputs to interrupt gates U7A and U7C are low causing the interrupt output (U2A pin 3) to be low (false).

d. All driver inputs and receiver outputs of Bus Transceivers U6, U9 and U12 are low.

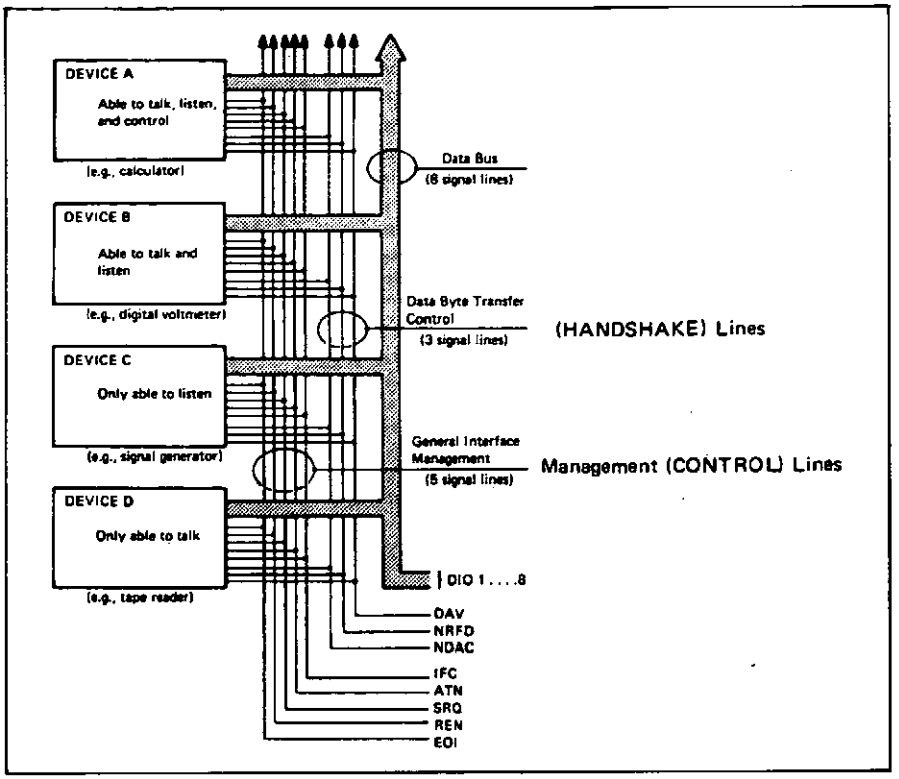

Figure 8-43. Interface Connections and Bus Structure.

NOTE

It is possible for the interface circuit to momentarily drive the Bus lines low (true) before the turn-on sequence has been completed.

8-146. Circuit Response to Bus Commands. The following description explains the Voltmeter interface circuit response to command statements received from the HP-IB (Hewlett-Packard Interface Bus). This description is divided into five parts as follows:

a. Acceptance of the command data.

b. Voltmeter execution of the command.

c. Completion of the "handshake" sequence.

d. Receive Data.

e. Output Data.

8-147. Acceptance of the Command Data. The following describes the sequence performed by the Voltmeter interface circuit to accept command data. This sequence applies to all command statements received from the HP-IB.

8-148. The controller in charge of the HP-IB sets the code of the command data to be transferred on data lines DIO1 through DIO8 and sets the ATN (Attention) line low (true). The ATN signal is input to the Voltmeter interface circuit through inverter U3E and is applied to the input of buffer U15A and inverter U3B. The low output of U3B disables qualifier gates U2D, U14B, U14D and U13D and is applied to U2C to set its output high. The high output of U2C sets the enable inputs of U13A and U13B. The high output of U13B is applied to the driver B input of transceiver U9 to set the NDAC output low (true). This indicates to the HP-IB controller that the Voltmeter is ready to accept data.

8-149. After allowing time for the data on the DIO lines to "settle", the HP-IB controller sets the DAV (data valid) line low (true). The DAV signal is input to the interface circuit through transceiver U9 and is applied to the signal input of qualifier gate U13A. The high output of U13A is coupled through gate U2B and inverter U10D to the inputs of buffer U15D and interrupt gate U7C. The low (true) output of U7C is applied to the input of U2A to set the interrupt signal to the main processor.

8-150. Upon recognizing the interrupt signal, the main processor enables buffers U15 and U16 to read the status word. In this case, bit 3 is set, indicating valid data is on the bus, bit 5 must be set to enable the voltmeter to go to remote operation, and bit 6 is set to indicate the message is a command statement. The main processor enables buffers U17 and U18 to read the data byte.

8-151. After reading the data byte, the processor sets the "nrfd" output (1Q) of latch U11 high (true). The nrfd

signal is applied to the enable input of qualifier gate U13C and the driver A input of bus transceiver U9. Transceiver U9 drives the NRFD bus line low (true), indicating the Voltmeter has accepted the data. The processor next sets the "ndac" output (6Q) of latch U11 high (false). The ndac signal is applied through inverter U10A to the enable input of U2B and the signal input of U13B. The low output of U13B is applied to the driver B input of transceiver U9 to disable it and allow the NDAC Bus line to go high (false).

8-152. Execution of Command Instructions. After the command data has been accepted, as previously described, the main processor deciphers the data to determine the nature of the command. This section describes the interface circuit response to the following Bus commands:

a. "Listen" Command
b. "Unlisten" Command
c. "Talk" Command
d. "Untalk" Command

8-153. Listen Command. When the processor receives a listen address from the HP-IB it enables inverter U1 and reads the address code the Voltmeter has been set to. This code is determined by the settings of switch S1. The processor compares this code with the one received to determine if it has received its listen address. Upon recognizing the listen address of the Voltmeter, the processor sets the output (pin 10) of U70 low to turn A2CR2 (listen enunciator) on (see Front Panel Assembly Schematic). The processor next sets the "mla" output (4Q) of U11 high (true). The mla signal is applied, through inverter U8D, to the input of qualifier gate U2C to maintain its output high. At this point the Voltmeter has been addressed to listen and enabled to receive data messages.

8-154. Unlisten Command. Upon recognizing the "unlisten" command, the processor sets the output (pin 10) of latch U70 high to turn A2CR2 (listen enunciator) off (see Front Panel Assembly Schematic). The processor next sets the "mla" output (4Q) of latch U11 low (false) to return the interface circuit to the "turn-on" state.

8-155. Talk Command. When the processor receives a "talk" address from the HP-IB it enables inverter U1 and reads the address code the Voltmeter has been set to. This code is determined by the settings of address switch S1. The processor compares this code with the one received from the HP-IB to determine if it has received its talk address. Upon recognizing the talk address of the Voltmeter, the processor sets the output (pin 7) of latch U70 low to turn A2CR3 (talk enuncaitor) on (see Front Panel Assembly Schematic). The processor next sets the "dav req" output (5Q) of latch U11 high (true). This signal is applied to the enable input of qualifier gate U14C. At this point the Voltmeter has been addressed to "talk" and is awaiting the removal of the ATN signal by the HP-IB controller before outputting measurement data.

8-156. Untalk Command. Upon recognizing the "untalk" command, the processor sets the output (pin 7) of latch U70 high to turn the "talk" enunciator (A2CR3) off (see Front Panel Assembly Schematic). The processor next sets the "dav req"output (5Q) of latch U11 low (false) to return the interface circuit to the "turn-on" state.

8-157. Handshake Completion. After all instruments on the HP-IB have accepted the command data (the NDAC Bus line has gone high) the HP-IB controller sets DAV high (data is no longer valid). This sets the receiver D output of transceiver U9 low. The low output of U9 is applied to the input of U13A and through inverter U10C to the input of qualifier gate U13C causing its output to go high. The output of U13C is applied to the signal input of buffer U15C and to the input of interrupt gate U7A. The low output of U7A is applied to the input of gate U2A to set the interrupt signal to the processor.

8-158. Upon recognizing the interrupt signal, the processor enables buffers U15 and U16 and reads the interrupt code. In this case bit 4 is set, indicating the completion of a data byte. The processor determines the nature of the interrupt and sets the "ndac" output (6Q) of latch U11 low (true). The low output of U11 is applied through inverter U10A to the inputs of U2B andU13B. If the ATN signal or the mla signal is true the output of U13B will be set high. The high output of U13B is applied to the driver B input of transceiver U9 to set the NDAC line low (true). The processor next sets the "nrfd" output (1Q) of U11 low (false). The low output of U11 is applied to the driver A input of U9 to set the NRFD output high (false) and to the input of U13C to disable it and remove the interrupt signal. This completes the sequence for accepting and executing command statements.

8-159. Receive Data. Data received from the HP-IB is used to remotely program the Voltmeter's front panel controls (range, function, math, etc.). The Voltmeter must have previously been addressed to "listen" and set to remote control before it will respond to program data messages.

8-160. The following paragraphs describe the interface circuit response to program data messages. The HP-IB controller sets the program information on Bus lines DIO1 through DIO8. After allowing time for the information to "settle", the controller sets DAV (data valid) low (true). The DAV signal sets the receiver D output of transceiver U9 high (true). The high output of U9 is applied through inverter U10C to the input of qualifier gate U13C to disable it and to the input of U13A. The output of U13A is coupled through gate U2B and inverter U10D and applied to the input of buffer U15D and interrupt gate U7C. The low output of U7C is applied to the input of gate U2A to set the interrupt output to the main processor.

8-161. Upon recognizing the interrupt signal, the processor enables buffers U15 and U16 and reads the status word. After determining the nature of the interrupt, the processor enables buffers U17 and U18 and reads the program data. If the processor has read the first byte of program data (two bytes are required for each program step) it sets a flag

and retains the first data byte information. If the processor has read the second byte of information it stores the composite of the first and second bytes and sets the appropriate output of enunciator latches U65 through U70 low (true) to light the enunciator pertaining to the program information. The processor next sets the nrfd output (1Q of latch U11 high (true). The output of U11 is applied to the enable input of qualifier gate U13C and to the driver A input of transceiver U9 which sets the NRFD bus line low (true). The processor next sets the ndac output (6Q) of latch U11 high (false). This signal is applied through inverter U10A to the input of qualifier gate U2B to disable it and remove the interrupt signal to the processor. The ndac signal is also applied to the input of gate U13B. The low output of U13B is applied to the driver B input of transceiver U9 which stops driving the NDAC bus line (allows it to go high). This indicates to the HP-IB controller that the Voltmeter has accepted the data and is ready for more data.

8-162. Sensing that the Voltmeter has accepted the data, the HP-IB controller sets the DAV line high (data on the DIO lines is no longer valid) and prepares to output the next data byte. The DAV high signal sets the receiver D output of transceiver U9 low. The low output of U8 is applied to the input of gate U13A to disable it and through inverter U10C to the input of gate U13C. The high output of U13C is applied to the signal input of buffer U15C and to the input of interrupt gate U7A. The low output of U7A is applied to the input of gate U2A to set the interrupt output to the processor. The processor recognizes the interrupt signal and enables buffers U15 and U16 to read the bus status word.

8-163. Upon determining the nature of the interrupt, the processor sets the ndac output (6Q) of latch U11 low (true). The output of U11 is applied through inverter U10A to the input of qualifier gate U2B and to the input of gate U13B. The high output of U13B is applied to the Driver B input of transceiver U9 which sets the NDAC Bus line low (true). The processor then sets the nrfd output (1Q) of U11 low (false). This signal is applied to the driver A input of U9, which sets the NRFD bus line high (false), and to the input of qualifier gate U13C to remove the interrupt signal. This completes the sequence for accepting one byte of program data.

8-164. Output Data. The following paragraphs describe the sequence followed by the interface circuit to output measurement data to the HP-IB. The voltmeter must have previously been addressed to "talk" and the HP-IB must NOT be in the command mode before the voltmeter can output measurement data.

8-165. When the Voltmeter is addressed to talk the "dav req" output (5Q) of latch U11 is set high (true). As the HP-IB exits the command mode (the ATN signal is removed) and all bus instruments are ready to accept data (NRFD is high) the output of qualifier gate U14C is set low. The output of U14C is applied to the input of buffer U16C and the input of interrupt gate U7C. The low output of U7C is applied to the input of U2A which sets the interrupt output to the processor.

8-166. Upon recognizing the interrupt signal, the processor enables buffers U15 and U16 to read the status word. After determining the nature of the interrupt the processor sets latches U20 and U19 to the code of the first byte of measurement data. The outputs of U19 and U20 are applied to the driver inputs of transceivers U6 and U12. The processor next enables transceivers U6 and U12 to output the measurement data to the HP-IB data bus (DIO1 through DIO7). After the measurement data has had time to "settle", the processor sets the "dav" output (2Q) of latch U11 high (true). The dav signal is applied to the input of qualifier gate U14A and gate U13D. The high output of U13D is applied to the driver D input of transceiver U9 which sets the DAV Bus line low (true). The processor then sets the dav req output (5Q) of latch U11 low (false). This signal is applied to the input of qualifier gate U14C to disable it and remove the interrupt signal. When the measurement data byte has been accepted by the receiving instrument(s) the NRFD line is set low and the NDAC line is high. The NDAC signal sets the Receiver B output of transceiver U9 low. This output is applied to the input of qualifier gate U14B. The high output of U14B is applied to the input of gate U14A to enable it. The low output of U14A is applied to the signal input of U16D and to the input of interrupt gate U7C. The low output of U7C is applied to the input of U2A to set the interrupt output to the processor.

8-167. Upon recognizing the interrupt, the processor enables buffers U16 and U15 and reads the status word. After determining the nature of the interrupt, the processor sets the dav req output (5Q) of latch U11 high. The processor then sets the dav output (2Q) of U10 low (false). This signal is applied to the input of gate U13D to remove the DAV signal from the Bus and to the input of qualifier gate U14A to remove the interrupt signal. This completes the output of one data byte. The sequence is repeated until each byte of measurement data has been output.

8-168. FRONT PANEL OPERATION.

8-169. Circuit Description.

8-170. Control Switches and Ennunciators. Refer to the Front Panel Assembly Schematic for the following description. Pressing a front panel key sets one of the input lines to priority encoder U57 low. The output of the encoder is the octal equivalent of the input line selected that is, the output when line "I7" is set low is 111, when line "I2" is low the output is 010, etc. The encoder also sets the gate output (pin 14) low to initiate the processor interrupt circuit. The outputs of U57 combined with the outputs of gate U50A and inverter U49A are applied to the inputs of latch U58. The inputs to U58 make up a code which represents the key pressed. The interrupt circuit, after a time delay of approximately 6 ms, sets the clock input (pin 9)

of U58 high to latch the switch code and also sets the interrupt input to the main processor.

8-171. Upon recognizing the interrupt input, the processor sets the interrupt enable output high to enable buffers U59 and U60 and reads the switch code. This code represents a vector address to the processor. The processor performs the program routine contained at the address indicated which includes transferring the new switch data to the inguard controller and outputting data to the front panel to change the necessary enunciators.

8-172. The new enunciator data is output to the data bus (lines DØ through D7) by the main processor and applied to the inputs of latches U65 through U70. The new enunciator code is contained on lines DØ through D5. Lines D6 and D7 are applied to the select inputs of decoder U64 and are used to determine which output of U64 will be set low. Outputs 1YØ through 1Y3 are enabled by the signal from device select decoder U41. Outputs 2YØ and 2Y1 are enabled by

8-173. Display. Measurement data is transferred to the display one number at a time. The polarity or numerical data is applied to the input of latch U54 and the digit (or position in the display) and decimal information is applied to the input of latch U63. The output of device select decoder U41 is applied to the clock input of U54 and U63 to latch the information. The position information is ap-

device select decoder U33. The outputs of U64 are activated by the delayed clock signal from U52F and applied to the clock inputs of latches U65 through U70. All outputs of U64 are high except the one driving the latch which is to accept the data. The enunciators are lit when the output of the latch driving them is set low.

plied to the select and data inputs of U56 to determine the proper display driver to be activated. The outputs of U56 are applied to the display drivers (Q11 through Q18) and are enabled by the signal from U48B (interrupt circuitry). The display is scanned from left to right one number at a time.

TROUBLESHOOTING

8-174. INTRODUCTION.

8-175. The following portions of this manual contain information to aid in troubleshooting and repair of the 3455A. This information consists of a General Block Diagram Theory of Operation, a Preliminary Troubleshooting Check, and eight Service Groups. An instrument block diagram and schematics are also included in this section of the manual.

8-176. General Block Diagram Theory of Operation.

8-177. Read this subsection if you wish to become familiar with the internal operation of the 3455A. Refer to the simplified block diagram (Figure 8-44) for the following discussion.

8-178. To understand the basic operation of the 3455A, the instrument can be divided into two sections. These sections of the Outguard Section and the Inguard Section.

8-179. Outguard Section.

8-180. The Outguard Section consists of most logic circuits and their power supplies. These circuits function as the internal main controller, HP-IB interfacing, and front panel interface of the instrument.

8-181. The main controller circuits are used to control communication between the front panel. HP-IB interface, and the Inguard Section. The controller also performs mathematical calculations to correct measurement data, and to provide instrument scaling or percent error readings.

8-182. The heart of the main controller circuits is a processor (referred to as the nanoprocessor) used in conjunction with the main controller ROMs. The processor and ROMs are located on the A3 board. The ALUs are used for calculations and are located on the A1 motherboard.

8-183. The front panel is used for the manual operation of the instrument and to display readings. By pressing a pushbutton on the front panel, the controller receives a message to do the operation requested by the operator (DC, AC, etc.). The main controller then sends a message to the inguard controller to do the operation. After the operation is completed, the inguard controller then sends information back to the main controller. The information is then converted and displayed on the front panel.

8-184. The HP-IB circuits are used to communicate between the HP-IB and the instruments main controller. Information can pass either from the HP-IB to the main

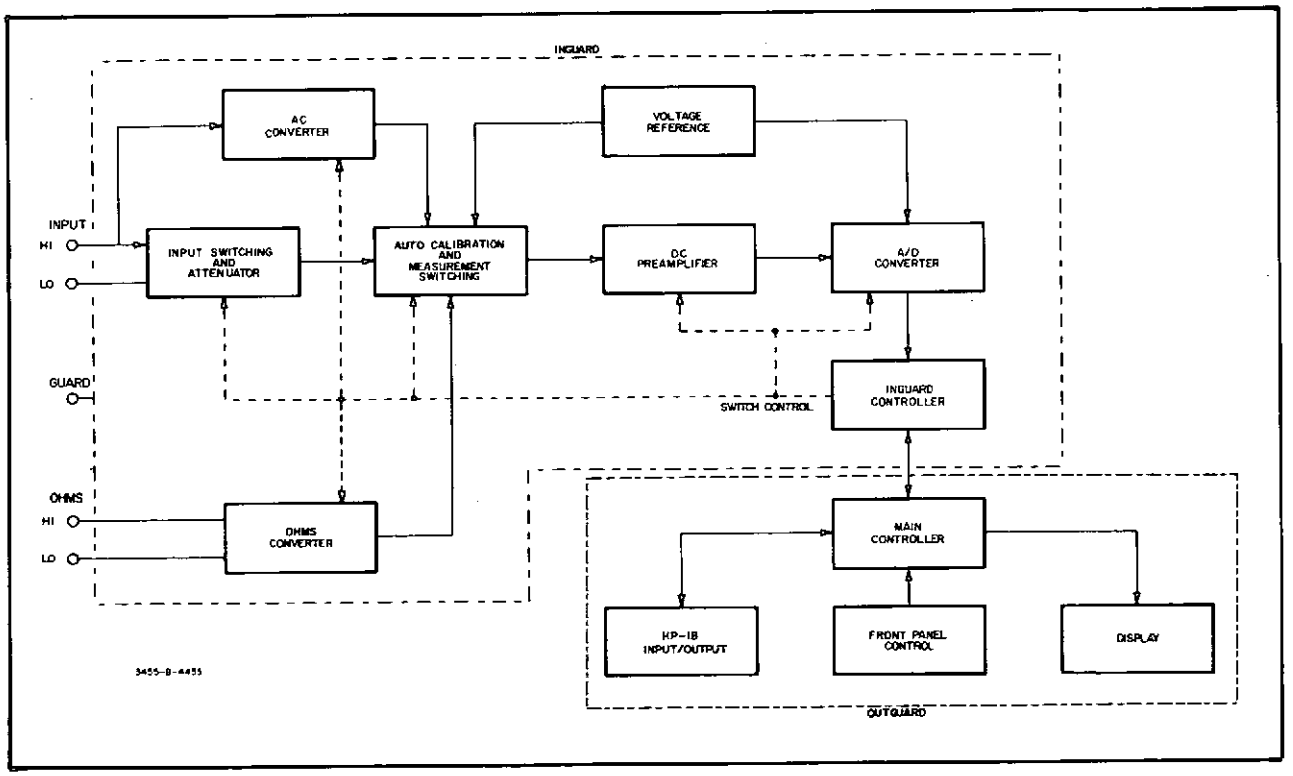

Figure 8-44. Simplified Block Diagram.

controller or from the main controller to the HP-IB. Example: the main controller receives a message from the Bus to read DC. After a reading is taken, the main controller sends the reading to the Bus. It should be noted, as with the front panel, the bus circuitry can interrupt the main controller whenever necessary (to clear interface, etc.).

8-185. Inguard Section.

8-186. The Inguard Section consists of the measuring circuitry, a controller, and power supplies. The main function of these circuits is to perform Auto-Cal, DC, AC, and Ohms measurements. These circuits are controlled by an inguard controller, which in turn are partially controlled by the outguard controller.

8-187. The circuits used for Auto-Cal and DC measurements are basically the same. The Auto-Cal measurements consists mostly of gain and offset measurements of various op-amps and FETs. The Auto-Cal function can be turned on or off, as desired by the operator.

8-188. The following procedure outlines a typical DC measurement.

a. A DC signal is applied to the input of the 3455A. This signal may or may not be attenuated by the input attenuator circuits.

b. The signal is next applied to the Main Amplifier through the Auto-Cal and Measurement Switching circuits. After pre-amplifications by the Main Amplifier, the signal is applied to the A/D convertor (10 V DC for full scale).

c. The A/D convertor changes the analog signal to a digital signal and sends the digital signal to the inguard controller. The inguard controller then transfers this information to the outguard controller.

d. The outguard controller processes the information and displays the reading on the front panel.

8-189. Auto-Cal measurements are taken in the form of Auto-Cal constants and are used to compensate for internal measurement errors. To help generate the cal constants (gain and offset), stable reference voltages (± 10 V) and stable resistive divider (1 kΩ, 100 kΩ, 900 kΩ, and 1 MΩ) are used. These circuits are located on the reference module. The reference voltages are also used for the operation of the A/D convertor.

8-190. The ohms convertor is used to supply the current for an ohms measurement and in turn causes a voltage drop across the unknown resistor. The voltage drop depends on the value of the unknown resistor and the range of the instrument. This voltage is measured along with a voltage drop across a reference resistor, by the DC circuits of the 3455A. The DC readings are then converted to digital readings and passed on to the main controller. The reading is then calculated by the main controller to an ohms reading to be displayed on the front panel.

8-191. The 3455A offers a choice of either a True RMS or an Average Responding AC Convertor. Both convertors changes an AC voltage to a DC voltage with an amplitude of approximately +6.7 V for a full scale input. This resultant DC voltage is then processed by the DC circuits, as explained in paragraph 8-188, with the exception of the DC attentuator circuits. The attenuation is done on the AC convertor board. The main controller receives the digital information from the inguard controller and is then processed to be displayed as an AC reading on the front panel. The following is an explanation of the differences between the convertors.

a. True RMS Convertor: The True RMS Convertor can either be AC or DC coupled. Using operational circuitry, the input voltage to the convertor is changed to a DC level proportional to the RMS value of the input voltage.

b. Average Responding Convertor: The Average Responding Convertor is only AC coupled. An average responding circuit calibrated to the RMS value of a sinasoidal input voltage, is used in this convertor. The resultant DC output of the convertor is a voltage proportional to the average value of the input voltages absolute value.

8-192. The inguard controller controls the operation of the inguard section after receiving instructions from the outguard controller. The inguard circuits being controlled are used to perform the various measurements.

8-193. For a more detailed explanation of the 3455A's circuitry, refer to the Theory of Operation Section in this manual (paragraph 8-10).

8-194. PRELIMINARY TROUBLESHOOTING CHECK.

8-195. INSTRUMENT HALF-SPLITTING TECHNIQUES.

8-196. Before proceeding to a particular service group for troubleshooting the 3455A should be half-split. This is done to determine if the failure is in the inguard or outguard section of the instrument. The following procedure can be used.

a. Half-splitting can easily be accomplished with an Inguard/Outguard Service Cable (part number 03455-61609) and a working 3455A (a second instrument) as follows:

1. With each 3455A turned off, disconnect the A10W1 Inguard/Outguard cable assembly from the outguard connector (A1J7) on each 3455A.

2. Plug the Inguard/Outguard Service Cable from one instrument's outguard connector (A1J7) to the other instrument's Inguard/Outguard cable assembly (W1). The instruments are now effectively half-split with one unit's inguard section connected to the other unit's outguard section (see (Figure 8-45)

3. Turn on the instrument with the active inguard section and then turn on the instrument with the active outguard section. The display from the unit with the active outguard should become energized. If the instrument malfunction has disappeared, then the portion of the defective instrument used (inguard or outguard) is working. Consequently, if the malfunction remains, the section of the defective instrument used is inoperative.

4. The defective section can be verified by reversing the Inguard/Outguard Service Cable and repeating steps 2 and 3. Make sure the 3455A's are turned off, when switching connections. Reversing the service cable should verify the defective section of the inoperative 3455A and also the working section.

NOTE

Make sure the power supplies of the inoperative 3455A are good.

b. Once it has been determined in what section the defective is located (Inguard or Outguard), the correct Service Group can be used for component isolation (see Paragraph 8-198 for a summary of the Service Groups).

8-197. If an extra 3455A or an Inguard/Outguard Service Cable is not available, use the method described in Service Group H; Figure 8-H-2. This method is not as complete as the half-split technique.

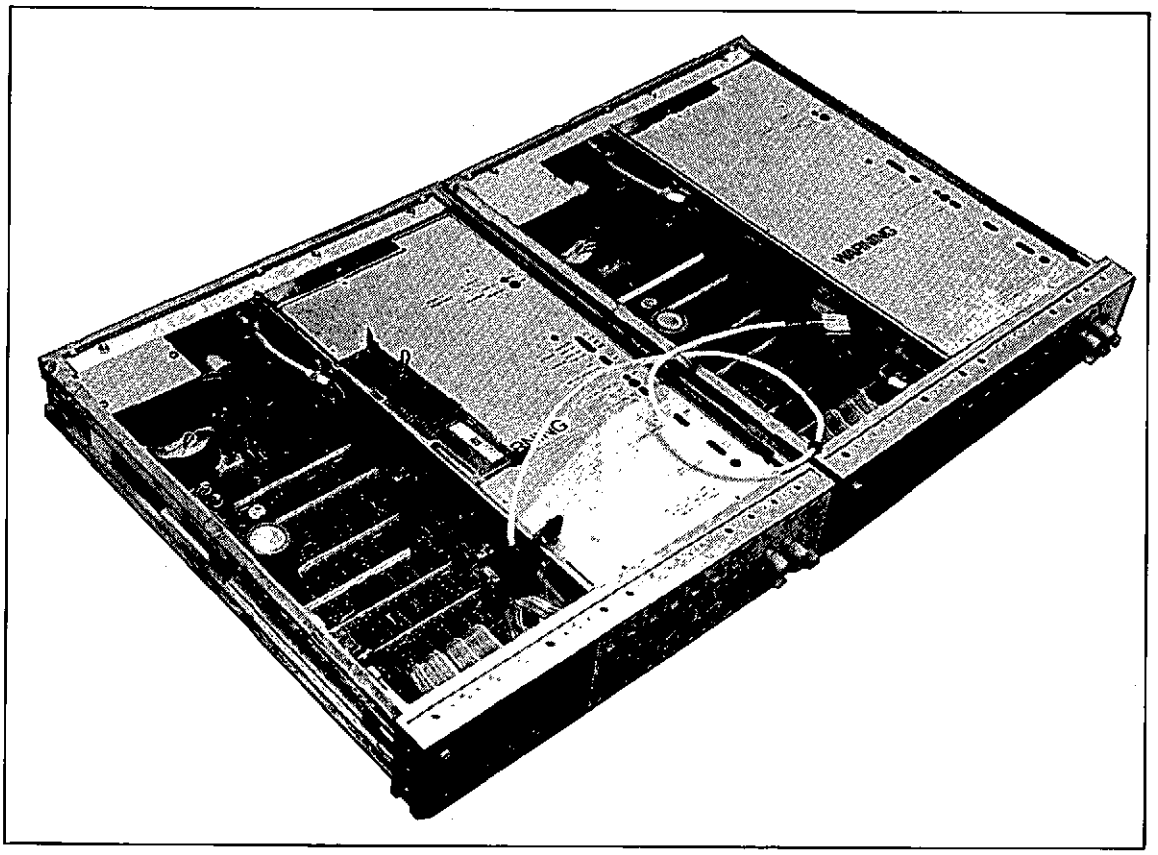

Figure 8-45. Inguard-Outguard Connections.

8-198. Service Group Summary.

8-199. The following is a summary of the various service groupsand should be used in conjunction with Table 8-3.

a. Turn-On Circuitry (Service Group A): Turn-on failures show up as an inoperative front panel "and" a blank display, at turn on. Use this service group if both of these symptoms are observed. The turn-on circuitry is working properly, if there is any indication on the display and the front panel is operative.

b. Auto-Cal and DC Troubleshooting (Service

Table 8-3. Service Group Listing.

Service Group	Service Group Description	Location	Assembly	Schematic
A	Turn-On Failures (Inguard, Outguard)	Paragraph 8-A-1	A1, A10	
	Inguard/Outguard Isolation	Paragraph 8-A-3	A1 A10	
	Outguard Troubleshooting	Paragraph 8-A-5	A1, A3	8
	Inguard Troubleshooting	Paragraph 8-A-6	A10, A14	6,7
	A10 Board Troubleshooting	Paragraph 8-A-8	A10	5, 6, 7
	A/D Board Troubleshooting	Paragraph 8-A10	A10, A14	5, 6
	Inguard/Outguard Transfer Troubleshooting	Paragraph 8-A-12	A1, A10	7,8
B	Auto-Cal and DC Troubleshooting (Inguard)	Paragraph 8-B-1	A10	
	Auto-Cal Constants	Paragraph 8-B-3	A10	
	DC Inoperative	Paragraph 8-B-17	A10	1
	General Noise	Paragraph 8-B-30	A10	
	DC Noise	Paragraph 8-B-32	A10	1
C	AC Convertor Troubleshooting	Paragraph 8-C-1		
	True RMS Convertor Servicing	Paragraph 8-C-3	A15	3
	AC Noise	Paragraph 8-C-12	A15	3
	Miscellaneous Troubleshooting	Paragraph 8-C-16	A15	3
	Average Responding AC Convertor	Paragraph 8-C-17	A13	2
D	Ohms Troubleshooting	Paragraph 8-D-1	A10, A12	1, 4
	Ohms Noise	Paragraph 8-D-11	A10, A12	1, 4
E	A/D Convertor and Inguard Logic Troubleshooting	Paragraph 8-E-1	A10, A14	
	A/D Convertor Servicing	Paragraph 8-E-2	A10, A14	6, 7
	A/D Noise	Paragraph 8-E-8	A14	6
	Inguard Logic Troubleshooting	Paragraph 8-E-10	A10	7
F	Outguard Logic Troubleshooting	Paragraph 8-F-1	A1, A3	8, 9, 10
	Main Controller Troubleshooting	Paragraph 8-F-3	A1, A3	8
	Front Panel Troubleshooting	Paragraph 8-F-4	A1, A2	10
	HP-IB Troubleshooting	Paragraph 8-F-8	A1	9
G	Miscellaneous Troubleshooting	Paragraph 8-G-1		
	Power Supplies	Paragraph 8-G-2	A10	11
	Reference Assembly	Paragraph 8-G-3	A11, A20	5
	Turn-Over Errors	Paragraph 8-G-4	A10, A14	1, 5, 6
	Other Troubleshooting	Paragraph 8-G-6	A1, A3, A10	8, 11
H	Troubleshooting Diagrams	Paragraph 8-H-1		
	General Troubleshooting Diagram	Paragraph 8-H-3	A1, A10	
	Inguard Troubleshooting Diagrams	Paragraph 8-H-4	A10	
	Outguard Troubleshooting Diagrams	Paragraph 8-H-6	A1	
	Schematics	Figure 8-H-28	All	1 to 11

Group B): Use this service group if an OL (overload) condition is observed at turn-on, or the instrument fails its self-test (see paragraph 3-6), or the dc mode is inoperative. A self-test failure is indicated if an integer number or non integer number is displayed, when the 3455A is in the self-test mode. A display of an integer number indicates an Auto-Cal failure and if only a non integer number is displayed, the failure is in the logic circuits. Use the half-split technique to isolate the inguard and outguard logic sections and go to Service Group E for the inguard logic troubleshooting and Service Group F for the outguard logic troubleshooting.

c. AC Convertor Troubleshooting (Service Group C): Use this service group if the ac function is defective. Before using this service group, however, the instrument should operate correctly in the dc function and Auto-Cal mode.

d. Ohms Troubleshooting (Service Group D): Use this service group if the ohms function is defective. Before using this service group, the dc function and the Auto-Cal mode of the 3455A should operate correctly.

e. A/D Convertor and Inguard Logic Troubleshooting (Service Group E): This service group can be used when it has been determined by the half-split technique that the inguard section of the instrument is defective. A faulty A/D Convertor or a faulty inguard can also be determined by an indication of strange readings on all functions and ranges. This service group can also be used if a defective A/D board has been

isolated by substituting it with a good A/D board.

f. Outguard Logic Troubleshooting (Service Group F): This service group should be used if a defective outguard section has been isolated by the half-split technique. Helpful hints for the Signature Analysis (SA) method are mainly given in this group.

. g. Miscellaneous Troubleshooting (Service Group G): This service group can be used for troubleshooting power supplies, reference assembly, turn-over errors, and others. The troubleshooting information in this group does not fit in the other groups.

h. Troubleshooting Diagrams (Service Group H): Troubleshooting Diagrams may be used to service the 3455A in place of the other service groups. This group also contains a detailed block diagram and all the schematics of the circuits used in the instrument.

SERVICE GROUP A

8-A-1. TURN-ON CIRCUITRY (INGUARD AND OUTGUARD).

8-A-2. Turn-On failures will show up as an inoperative front panel and a blank display. Because of the RAM's timing, the LED's which first light up will vary with instruments and also on the same 3455A each time it is powered up. Therefore the front panel will usually give no clues to the reason for any turn-on failures.

8-A-3. Inguard/Outguard Isolation.

8-A-4. Assuming that the power supplies of the 3455A are good, the Instrument Half Splitting Technique (paragraph 8-176) should be the first step in isolating turn-on failures. Either the inguard or the outguard section could hang up the 3455A's turn-on sequence. The front panel indication does not tell where the fault is located. Therefore, the Half-Splitting Technique should be used to isolate the fault between inguard or outguard section of the 3455A. If an extra 3455A and an Inguard/Outguard Service Cable is not available, the method described in Figure 8-45 may be used. When it is determined which section of the 3455A is at fault, go to the appropriate troubleshooting section in this service group (see paragraph 8-198 and Table 8-3).

8-A-5. Outguard Troubleshooting (Schematic 8).

a. Check for a clock signal at A3TP5. If no signal exists or the signal level is below 4 V(peak to peak), then troubleshoot the outguard clock circuit.

b. Add A1C46 (part number 0160-3622) if the 3455A does not have one (schematic 8).

c. Troubleshoot the outguard turn-on circuit (A1U5, U26, and associated components). Check for a pulse at turn-on, as shown below, which can be seen at U26 pin 9. This pulse connects to inverter U5 which holds data lines D2 through D7 low for the duration of the pulse. The processor should turn on at the trailing edge of that pulse.

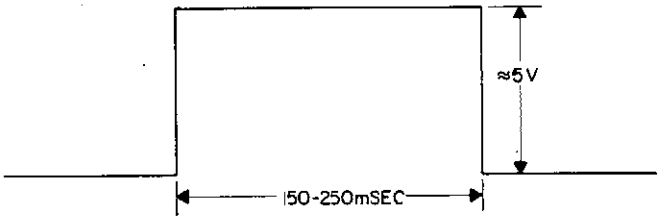

d. Check the Nanoprocessor interrupt circuit for correct operation. The IN ENA line should be held high and the IN REQ line should either toggle from high to low to high, or remain high. If these conditions do not exist, then troubleshoot the interrupt circuit (A1U46, U47, U53, and U55). The turn-on circuit (A1U26) must be working before troubleshooting the interrupt circuit.

e. Using the Signature Analysis routines in Figure 8-H-20 to 8-H-27, troubleshoot the outguard logic. If any difficulty is observed using the signature analysis routines, go to Service Group F, paragraph 8-F-1 for troubleshooting hints.

f. Using the information in Service Group F paragraph 8-F-1, troubleshoot the outguard logic.

8-A-6. Inguard Troubleshooting (Schmatic 5, 6, 7).

8-A-7. The Inguard Mother Board (A10) and or the A/D Convertor Board (A14) may cause turn-on failures. To isolate one from another swap a good A/D convertor board (A14) with the one in the inoperative 3455A. If a known good A14 board is not available, use the one from the 3455A which was used in half-splitting the instrument.

8-A-8. A10 Motherboard Troubleshooting (Schematic 5, 6, 7).

8-A-9. Use the following steps in the order they are presented to troubleshoot the Inguard Motherboard (A10).

a. Check for a clock signal at A10U26 pin 27. If no signal exists or the signal level is below 4 V (peak to peak), troubleshoot the inguard clock circuit.

b. Check the ± 10 V reference voltages at A10TP8 for + 10 V ± 100 μV, and at A10TP7 for -10 V ± 20 mV (schematic 5). If these voltages are too low, the 3455A may not complete the Auto-Cal routine and lock up.

c. Pin 29 of A10U26 should, under normal condition, be toggling. At turn-on it should have a 20 msec negative going pulse. If these signals are not present, then troubleshoot the inguard processor turn-on circuit. This circuit consists of U24, U19, U9, and their associated circuits. Normally U9 pin 11 should have a 2 V signal with some ripple and about 1.2 V at pin 10. At turn-on U19 pin 2 should have the approximate pulse as shown below.

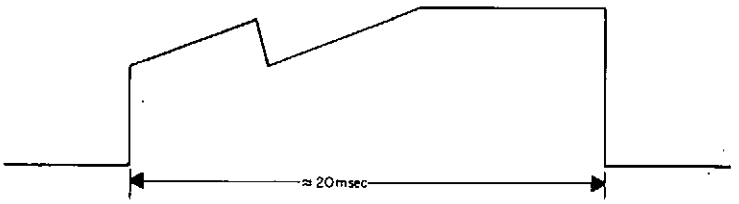

d. A 300 nano second negative pulse for each interrupt should be observed at U32 pin 4. Since it is difficult to observe the pulse, this interrupt circuit can be checked by manually clocking TP10. This can be achieved by pulling TP10 low and then releasing it. U26 pin 29 should then toggle. If no toggling is taking place, troubleshoot the interrupt circuit consisting of U32A and U27. If there is toggling, check T2 or the outguard section (A1).

e. Check for an A/D waveform (see Service Group E). If none is present, toggle TP10 again and look for an A-D waveform. If the waveform appears, then troubleshoot the interrupt circuit consisting of U32A and U27.

f. Check for toggling outputs on pins 2, 4, 6, 8, 10, and 12 of U22.

g. The outputs (pins 9 to 15) of U14 should also toggle with 500 nano second wide negative pulses.

h. Check operation of latches U11 to U13, U15 to U17, and ROM U25.

i. Make sure that the zero detect signal (U32B pin 12) is not loaded down by anything on the A10 board.

8-A-10. A/D Board Troubleshooting (Schematic 5, 6).

8-A-11. A couple of checks can be made to troubleshoot the A/D board (A14). One check is to make sure that the ± 10 reference voltages are correct. A10TP8 should be + 10 V ± 100 μV and A10TP7 should be -10 V ± 20 mV. Another check, is to make sure that there is a zero detect signal at A14 pin 5. If these checks are good and the 3455A is still inoperative, go to Service Group E for further troubleshooting.

8-A-12. Inguard/Outguard Transfer Circuit Troubleshooting (Schematic 7, 8).

8-A-13. At turn-on the outguard processor starts the operation of the inguard processor. The inguard then enables the outguard. Since timing is very critical, the Inguard/Outguard Transfer circuit may cause turn-on failures. Depending on where the failure is located, it could show up as either an inguard or an outguard malfunction. When half-splitting the 3455A, the following checks should be made to troubleshoot the transfer circuit.

a. The signals at A10U26 pins 34 to 37 (inguard) should be the same as those on A3TP4 to TP1 (outguard). The only exception is the signal at A3TP1. This signal should be the same as the signal at A10U28 pin 9. If the signals do not agree, check for malfunctions in the inguard light isolators

A10U34 and U35, plus associated circuits. Lines FØ and F1 transfer data from outguard to inguard FØ is the data transfer line and F1 is the data transfer rate line), while F2 and F3 send data from inguard to outguard (F2 is the handshake line and F3 is the data transfer line).

b. HAZ line must be high, if not, check TP10.

c. Use the Inguard/Outguard transfer circuit troubleshooting diagram (Figure 8-H-17) for further troubleshooting.

d. The inguard power supply regulators (10U36 to U39) can also cause transfer problems. The outguard should power up after the inguard. Check for a slow (more than 200 msec) inguard power supply.

SERVICE GROUP B

8-B-1. AUTO-CAL AND DC TROUBLESHOOTING (INGUARD).

8-B-2. All 3455A input signals travel through the main dc amplifier and Auto-Cal circuits. In order to troubleshoot D.C. and Auto-Cal malfunctions, a good fundamental knowledge of the 3455A's Auto-Cal and self-test routines are required.

8-B-3. Auto-Cal Constants.

8-B-4. There are 14 cal constants used in the 3455A, which are usually zero and full scale voltage "readings". These account for most offsets, gain, and drift of the input op-amps. The "readings" are taken periodically when the 3455A is in the Auto-Cal mode. A condensed description of all the cal constants are in Table 8-B-1. If a more detailed description of the cal constants is desired, refer to the appropriate paragraph in the Theory of Operation section of this manual.

Table 8-B-1. Auto-Cal Constants

Constant Number	Constant Description	Circuits Used	Detailed Operation
13	Io, no input - A/D offset measurement	- - - -	Paragraph 8-45
12	I±, I ratio - ± 10 V reference input, A/D current ration measurement.	- - - -	Paragraph 8-46
11	10 V offset - X1 gain with amplifier input tied to ground. Input attenuator at X1 gain.	Figure 8-B-1	Paragraph 8-24
10	10 V gain - X1 gain with amplifier tied to + 10 V reference. Input attenuator at X1 gain.	Figure 8-B-2	Paragraph 8-27.
9	Ohms and .5 V offsets - X20 gain with amplifier input tied to ground. Input attenuator at X1 gain.	Figure 8-B-3	Paragraph 8-39
8	Ohms and 5 V offsets – X2 gain with amplifier input tied to ground. Input attenuator of X1 gain.	Figure 8-B-4	Paragraph 8-39
7	100 V offset #2 (X1) - gain with amplifier input tied to 10:1 attenuator with top of 10:1 attenuator tied to ground.	Figure 8-B-5	Paragraph 8-26
6	1000 V offset - X1 gain with amplifier tied to 100:1 attenuator with top of 100:1 attenuator tied to ground.	Figure 8-B-6	Paragraph 8-26
5	100 V gain - X10 gain with amplifier tied to 10:1 attenuator with top of 10:1 attenuator tied to X10 V reference.	Figure 8-B-7	Paragraph 8-31
4	100 V offset #1 (X10) - X10 gain with amplifier input tied to 10:1 attenuator with top of 10:1 attenuator tied to ground.	Figure 8-B-8	Paragraph 8-33
3	.1 V offset -X100 gain with amplifier input tied to ground. Input attenuator of X1 gain.	Figure 8-B-9	Paragraph 8-25
2	1 V offset #1 -X10 gain with amplifier input tied to ground. Input attenuator of X1 gain.	Figure 8-B-10	Paragraph 8-25
1	1 V offset #2 -X10 gain with amplifier input tied to 10:1 divider. Top of divider shorted to ground. Input attenuator at X1 gain.	Figure 8-B-11	Paragraph 8-30
0	1 V gain -X10 gain with amplifier tied to 10:1 divider with 10 V at the top of the divider. Input attenuator at X gain.	Figure 8-B-12	Paragraph 8-28

8-B-5. When pressing the TEST button of the 3455A, each cal constant is measured. The first constant measured is constant number 13. If constant 13 is within certain limits (which are internally set) the 3455A will automatically measure the next constant. If constant 13 is out of its limits the self test operation will stop. A number 13 will be displayed on the front panel of the 3455A. In order to measure the next cal constant, the TEST button needs to be pressed again. If all the cal constants are good, a logic check will be performed. The 3455A will then display + .8.8.8.8.8.8.8 when the self-test operation is completed. After the self-test operation is finished it will automatically start again. To bring the 3455A out of this loop, any function key other than TEST needs to be pressed.

8-B-6. When the 3455A is in the self-test mode, and it fails this test, it will stop and display an integer number. This number is the number of the cal constant that fails. To continue the self-test operation, press the TEST button again. After all the cal constant measurements are taken, and the 3455A is still in the self-test mode, another measurement is taken. A dummy cal constant calculation is performed in the outguard section of the 3455A. If this calculation is correct (answer should be 10), nothing will be displayed. The instrument will then finish the self-test operation. If the dummy calculation is incorrect, a non-integer number (e.g., 9.998 or 10.002) will be displayed on the front panel. Again, to continue the self-test operation the TEST button needs to be pressed.

8-B-7 When the 3455A is used with the HP-IB system and if any of the cal constants fail, the 3455A will not output any readings. If only the dummy calculation fails then the dummy calculation answer will be output on the bus. If the 3455A passes its self-test then a 10 will be output on the bus.

8-B-8. The 3455A should not be troubleshoot for Auto-Cal malfunctions in the self-test mode. If any cal constants fails, including the dummy constant, use the cal constant service procedure (paragraph 8-B-10) for troubleshooting. If only the dummy constant fails try replacing the ALU's (A1U28, 30), and their associated circuits, in the outguard section (schematic 8). If the dummy constant still fails, go to the Outguard Troubleshooting Service Group (Service Group F).

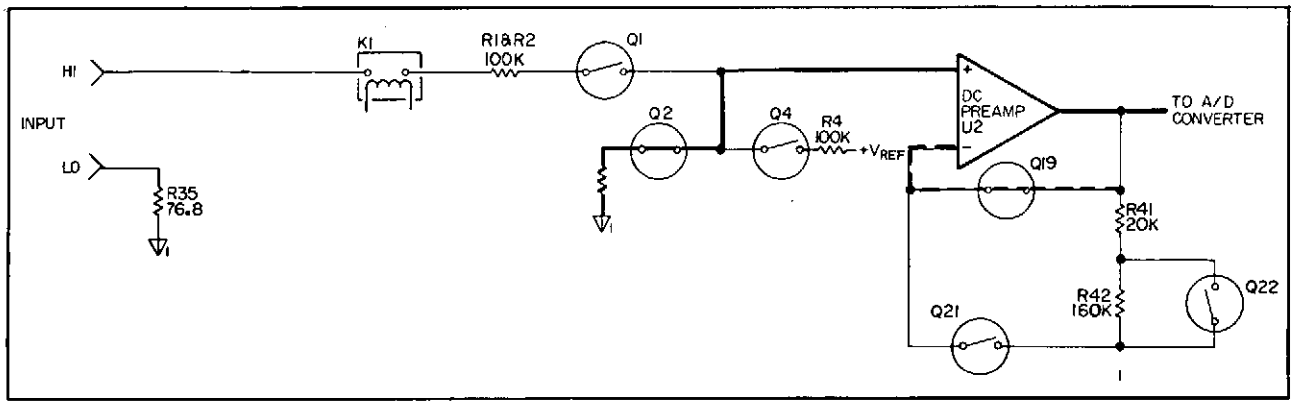

Figure 8-B-1. Auto-Cal Constant #11 (10 V Offset).

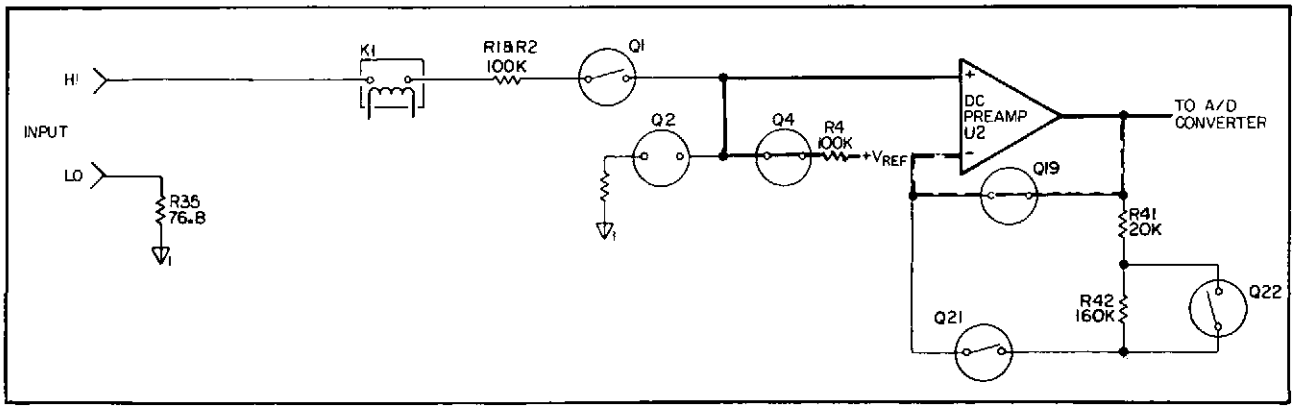

Figure 8-B-2. Auto-Cal Constant #10 (10 V Gain).

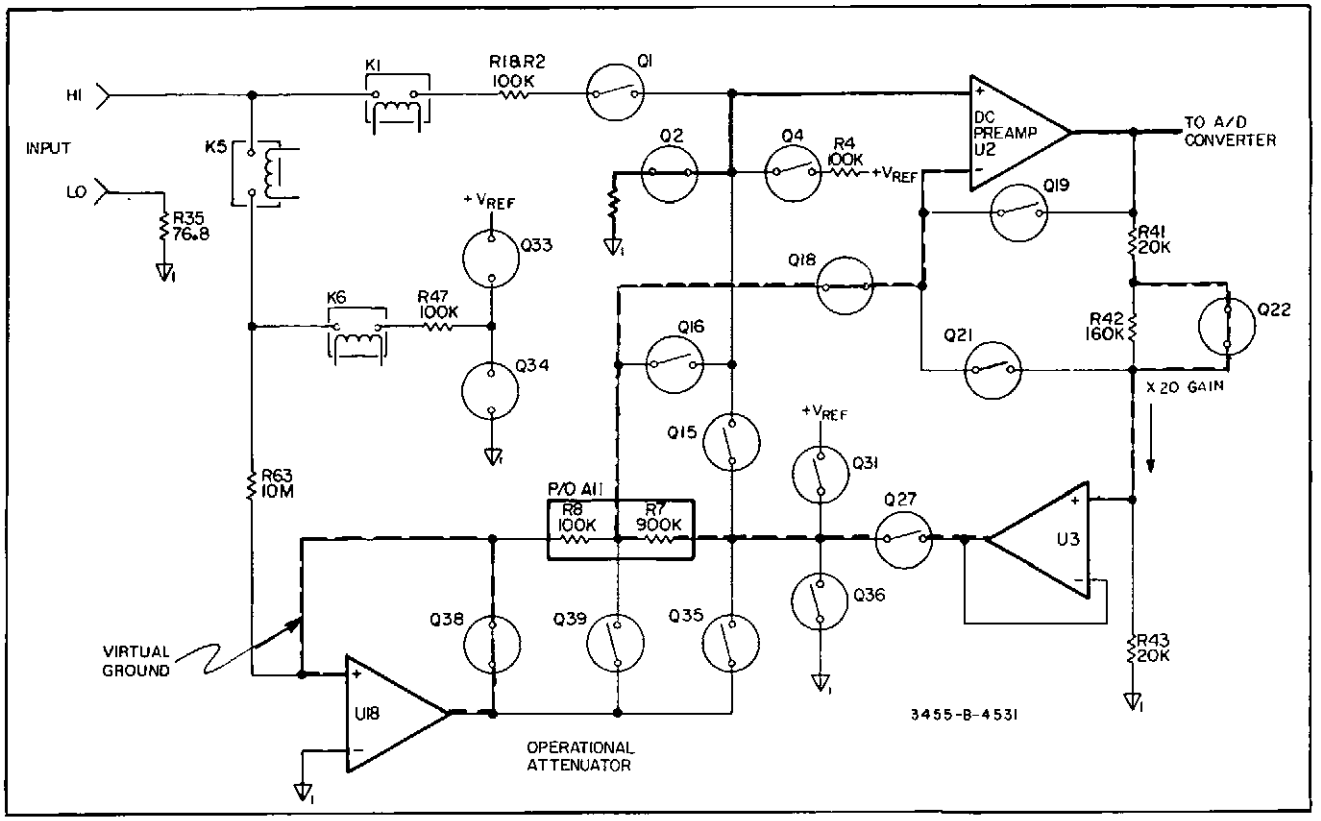

Figure 8-B-3. Auto-Cal Constant #9 (10 K, 100 K, and 10 M Offsets).

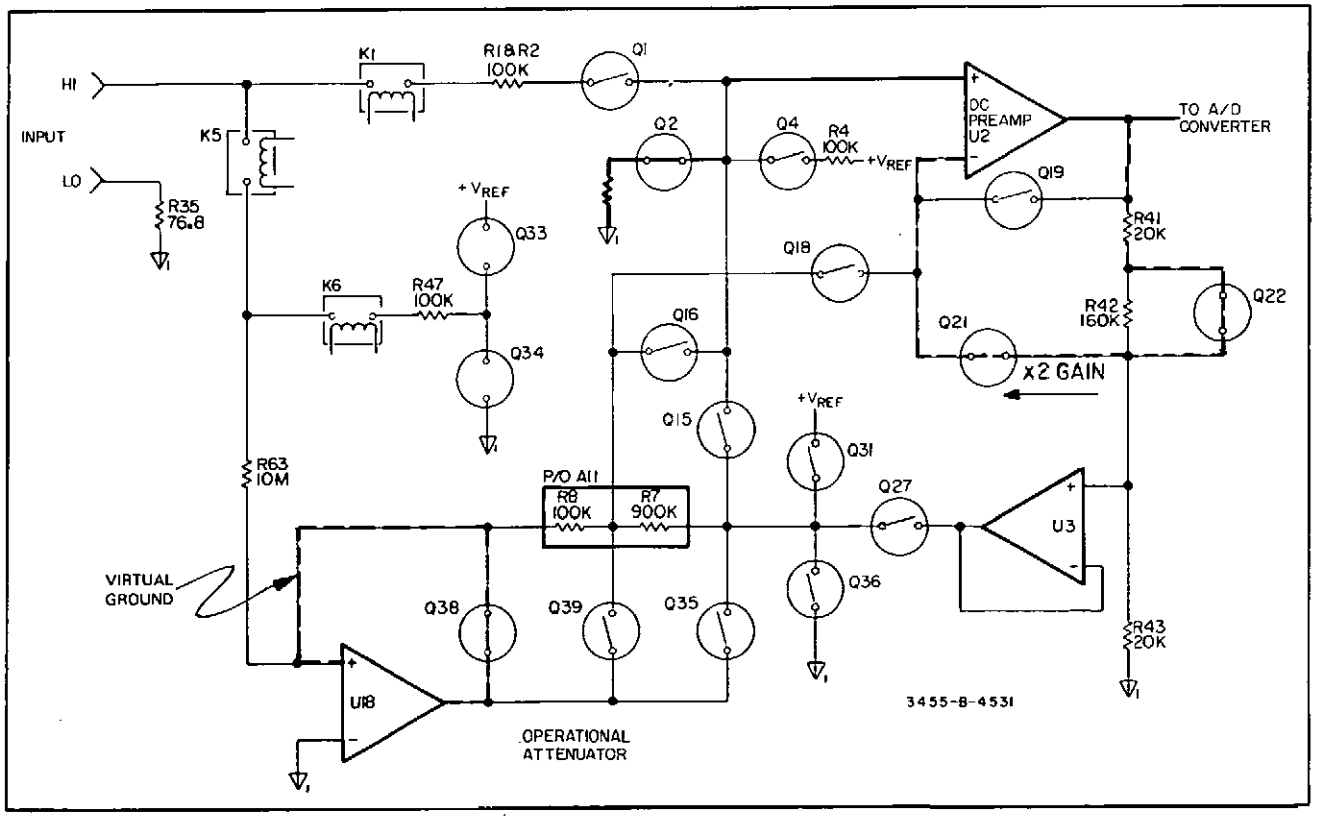

Figure 8-B-4. Auto-Cal Constant #8 (10 K, 100 K, and 10 M Offsets).

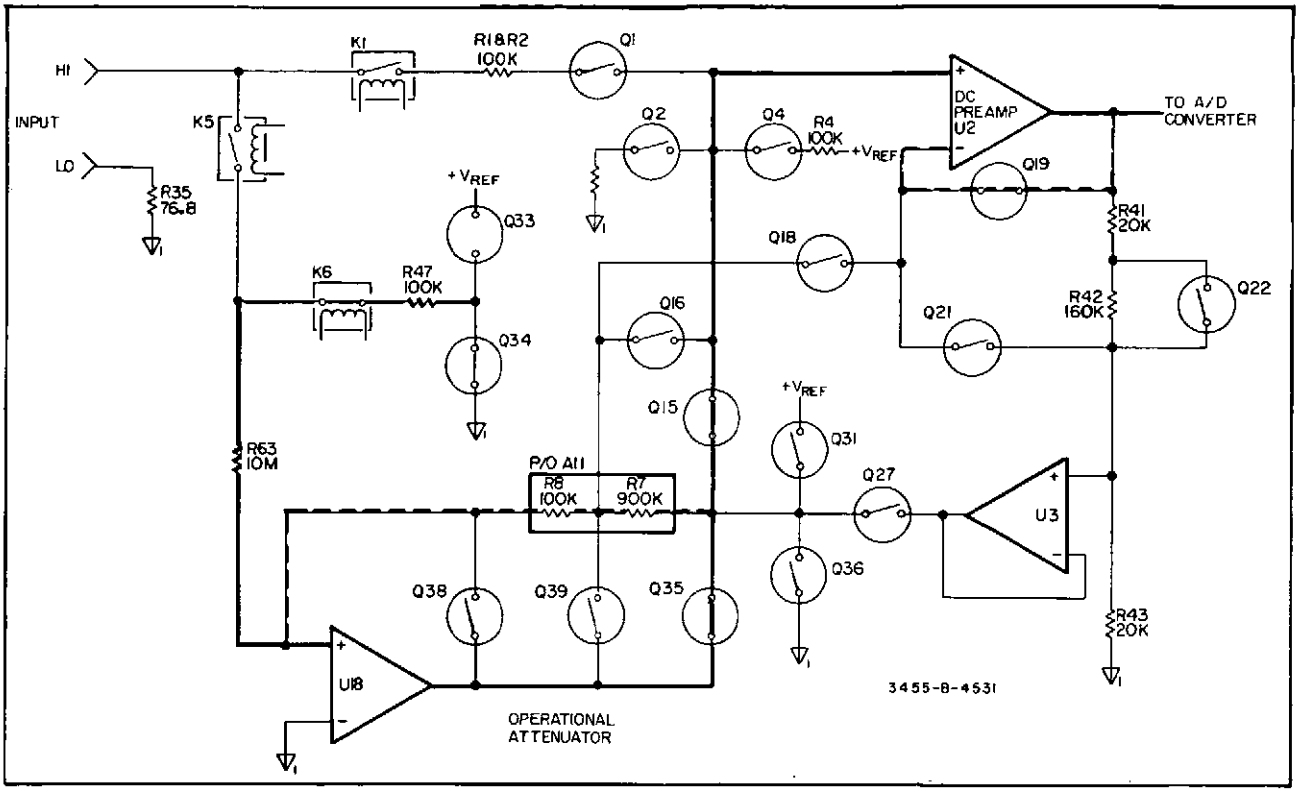

Figure 8-B-5. Auto-Cal Constant #7 (100 V Offset #2).

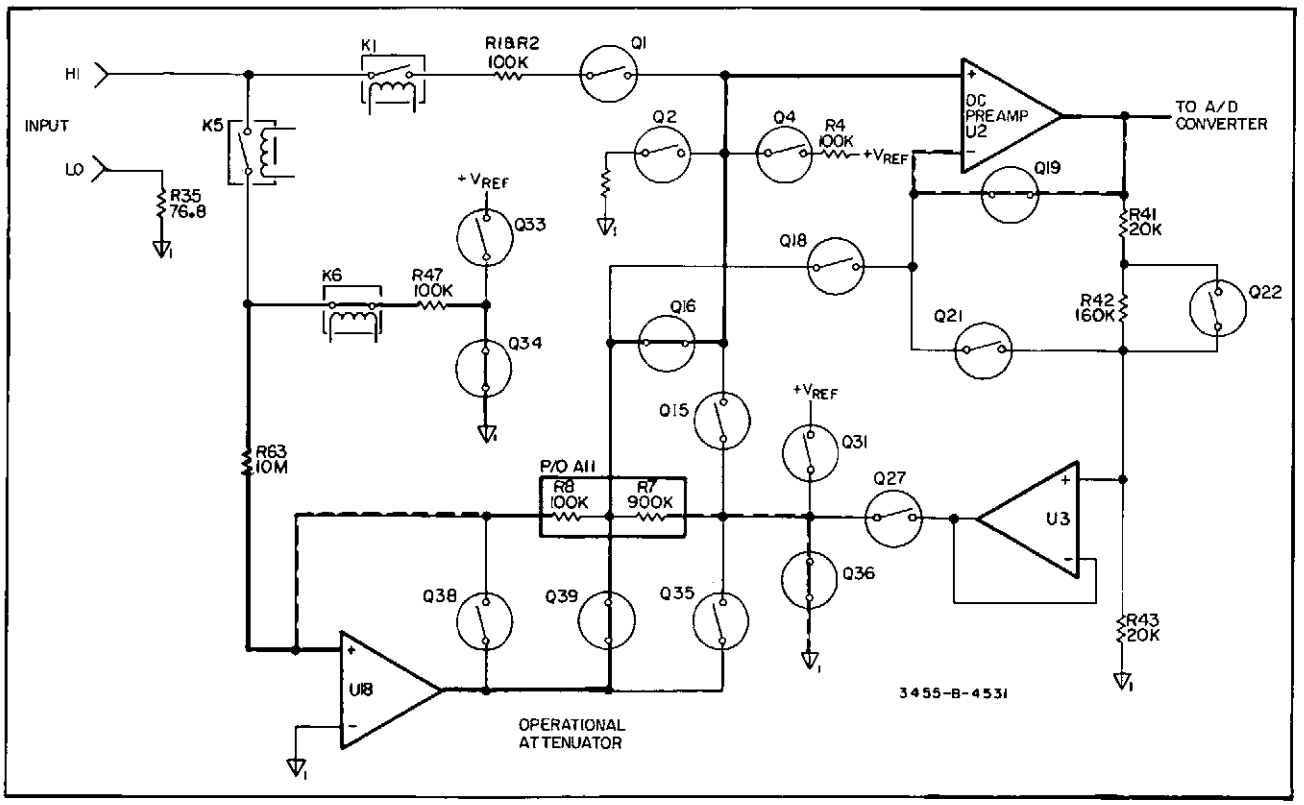

Figure 8-B-6. Auto-Cal Constant #6 (1000 V Offset).

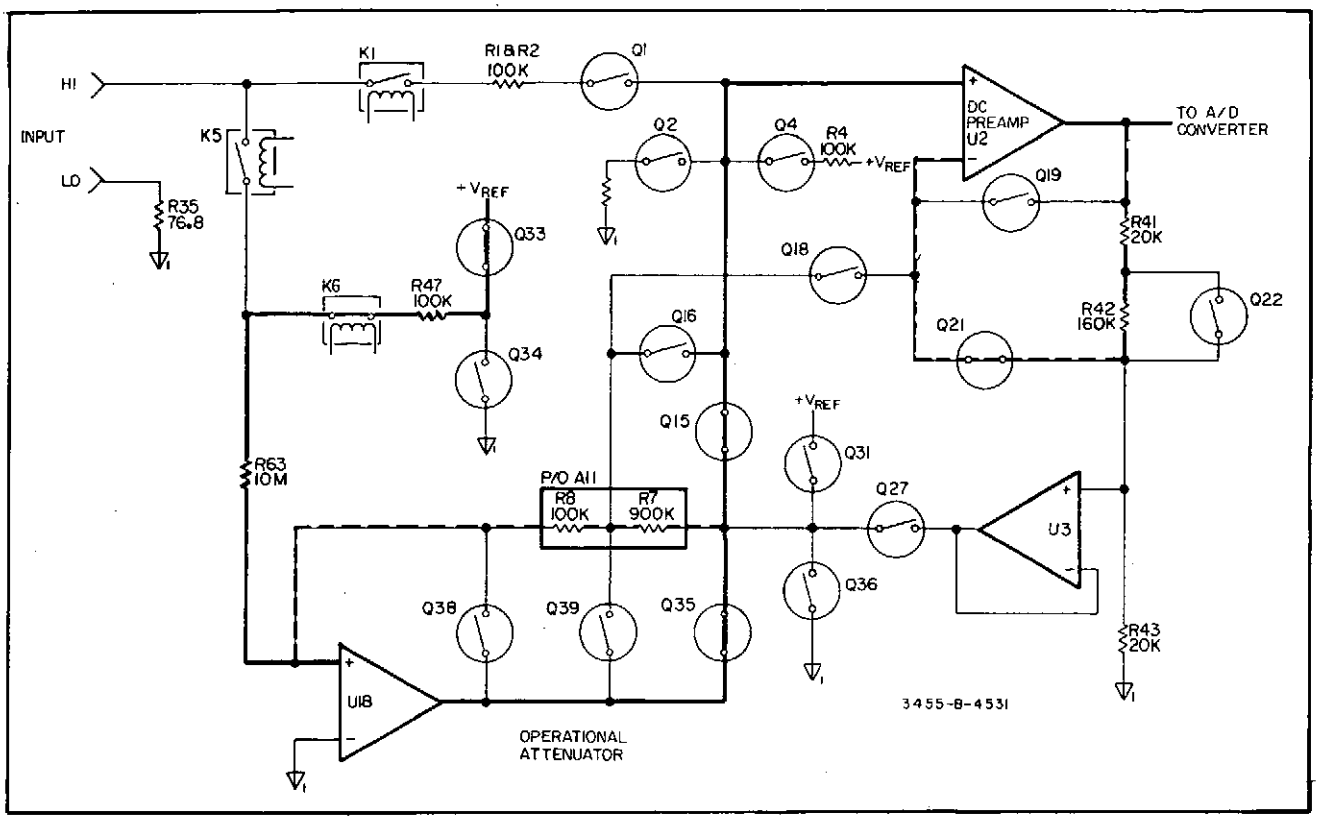

Figure 8-B-7. Auto-Cal Constant #5 (100 V Gain).

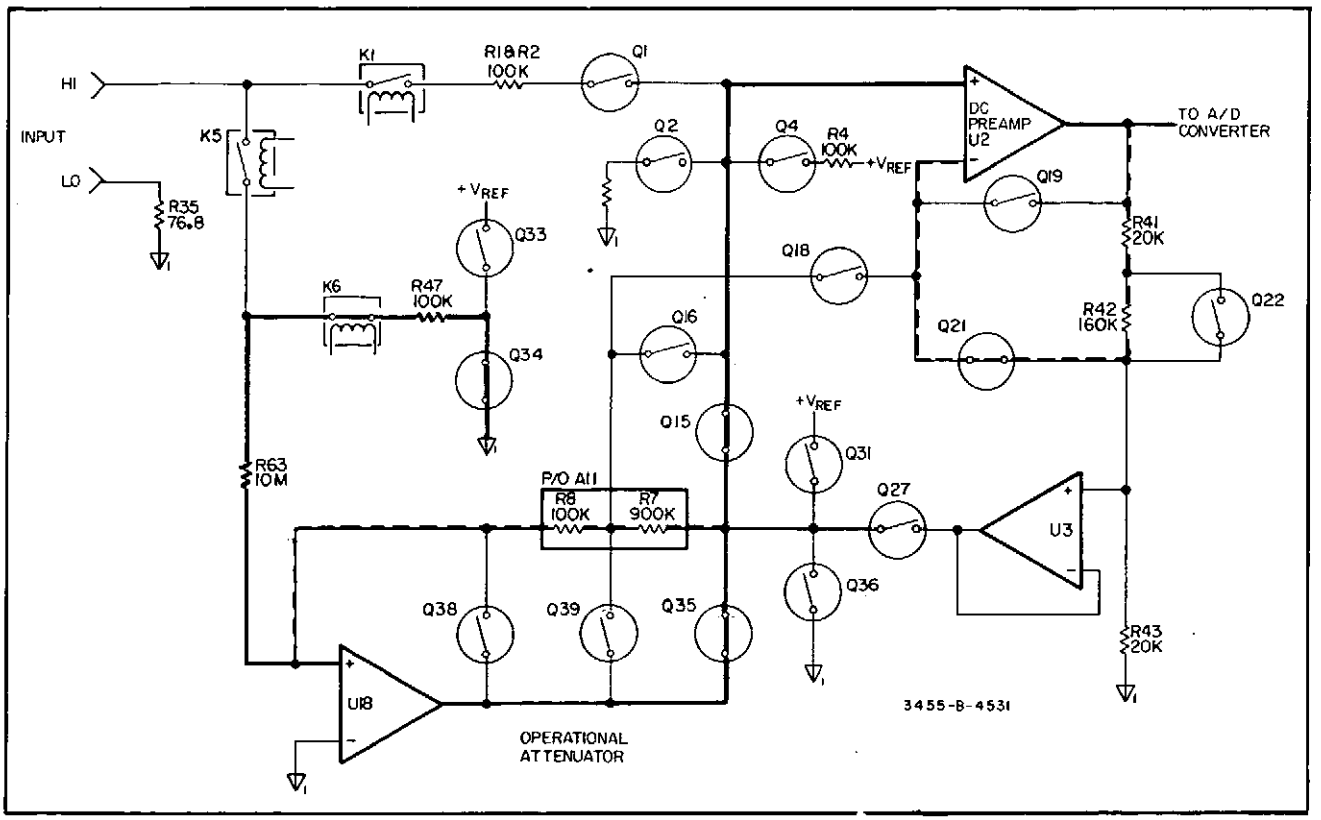

Figure 8-B-8. Auto-Cal Constant #4 (100 V Offset # 1).

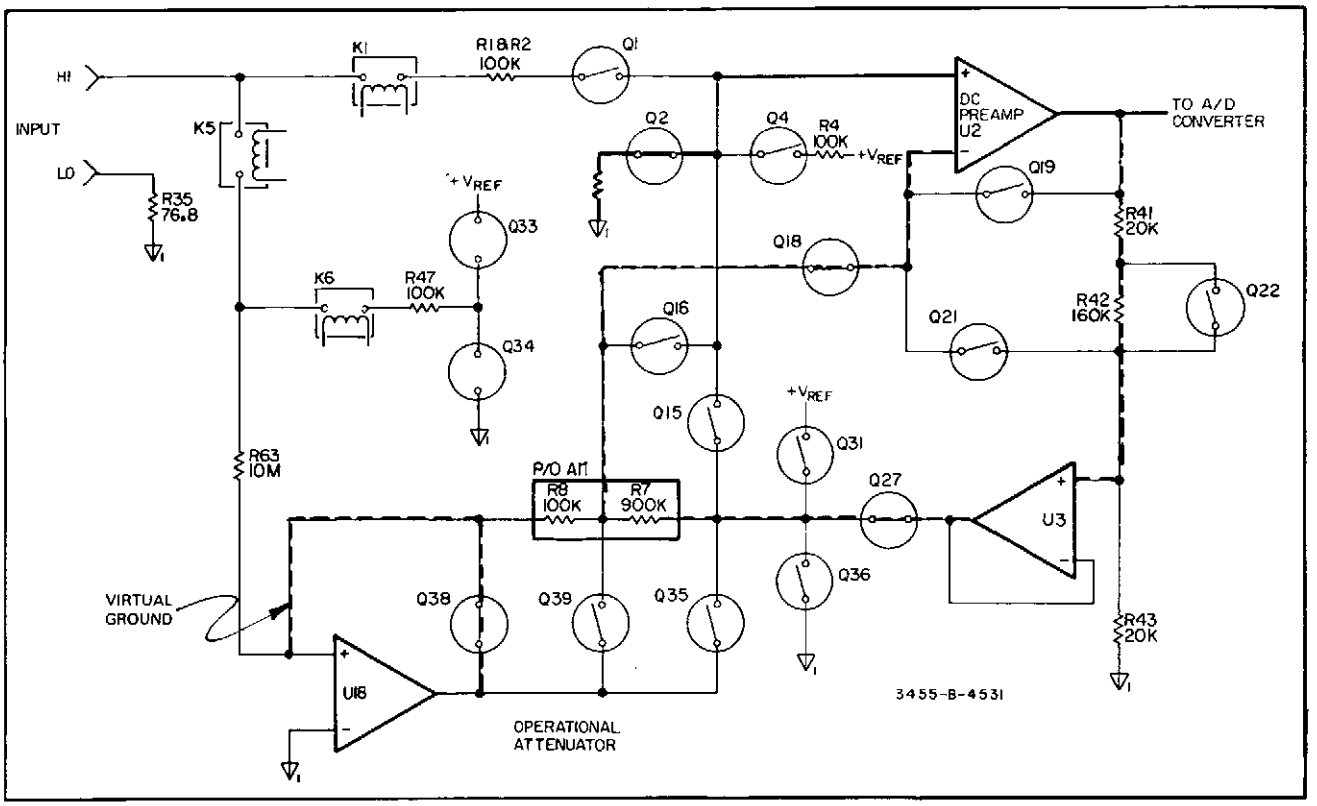

Figure 8-B-9. Auto-Cal Constant #3 (.1 V Offset).

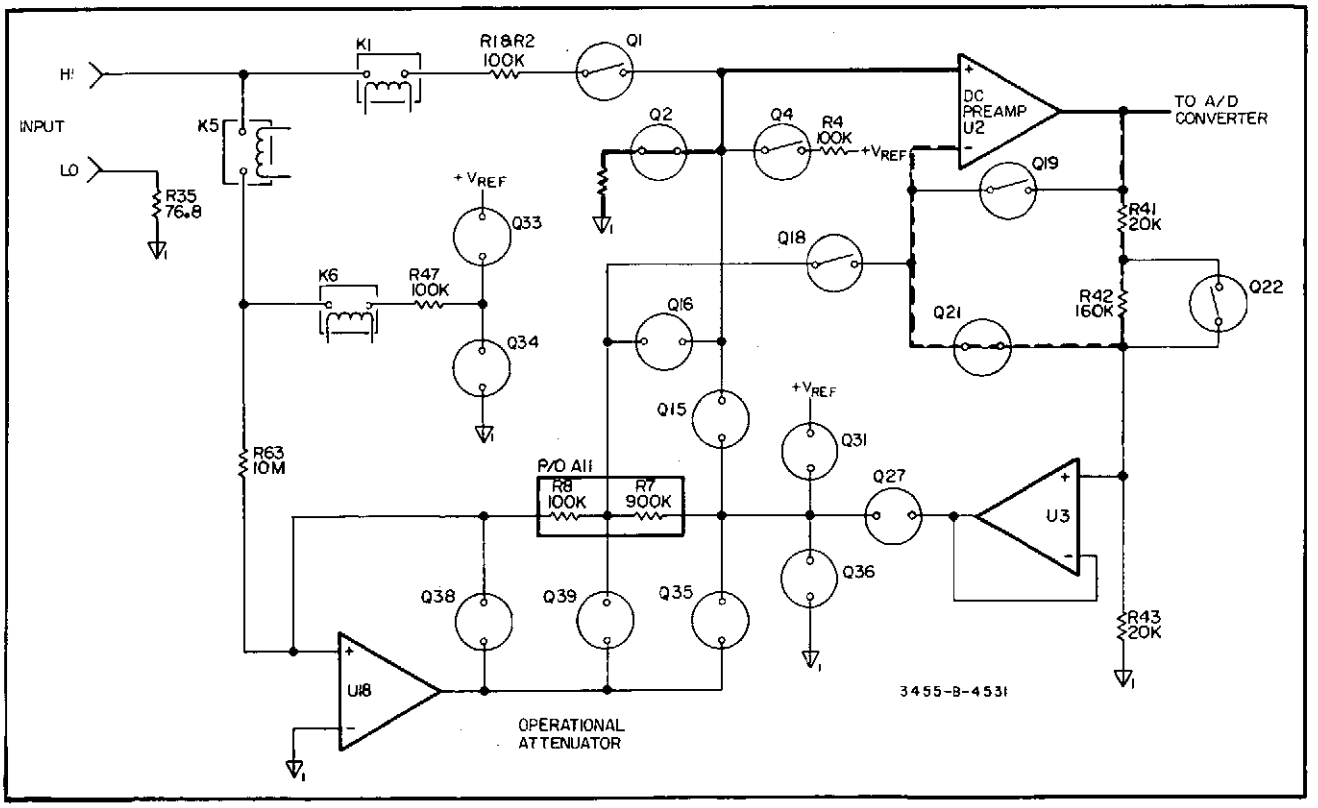

Figure 8-B-10. Auto-Cal Constant #2 (1 V Offset #1).

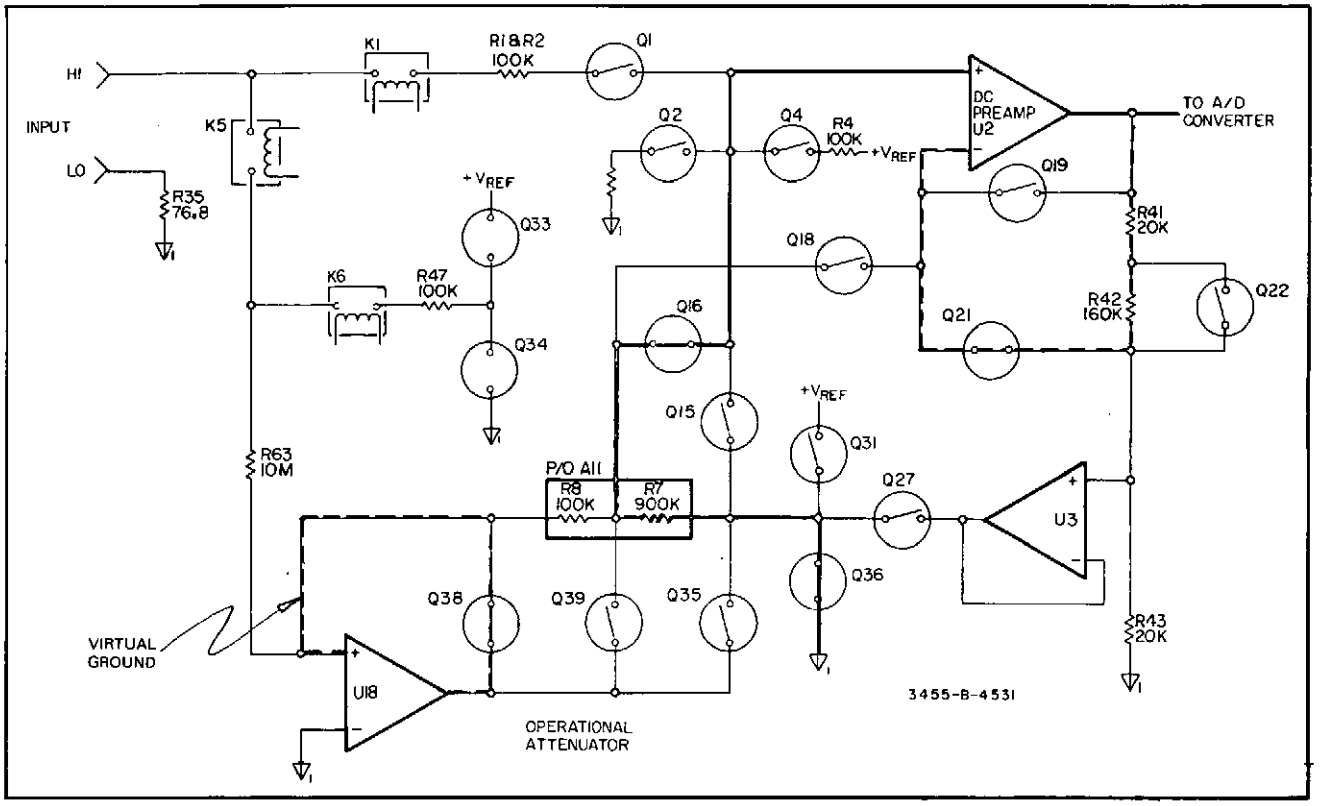

Figure 8-B-11. Auto-Cal Constant #1 (1 V Offset #2).

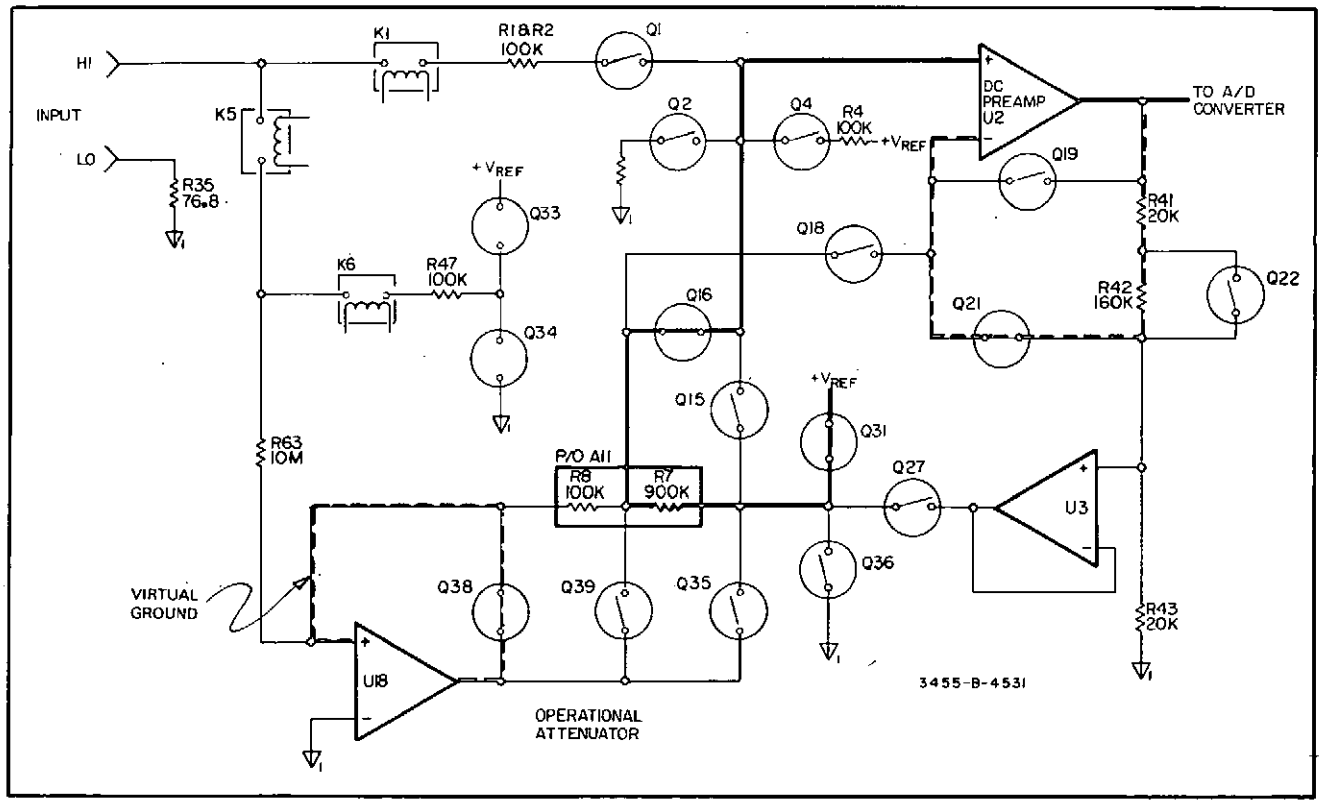

Figure 8-B-12. Auto-Cal Constant #0 (1 V Gain).

8-B-9. Auto-Cal Switch Closures. (Schematic 1, 5, 6, 7).

8-B-10. Various tables are included in this service group which can be used as troubleshooting aids for Auto-Cal failures. Table 8-B-2 shows the closed switches for the measurement of Auto-Cal constant 11 to 0. The function of several gates used in the Auto-Cal mode of the instrument are shown in Table 8-B-3. To find the switch drive voltage levels for Auto-Cal constants 13 to 0, Table 8-B-4 should be used.

8-B-11. Cal Constants Service Procedure.

8-B-12. When the 3455A is in the Auto-Cal mode, the instrument measures one or more cal constant between each sample. The number of cal constants measured depends on the sample rate. In order to reach a certain cal constant measurement, use the following procedure.

a. Press the DCV and HOLD/MANUAL buttons and then the AUTO CAL button of the 3455A. The instrument should now be stopped at a certain cal constant.

b. Make sure the 3455A is out of the Auto-Cal mode. Press the AUTO CAL button again, if necessary (the light in the AUTO CAL button should be off).

c. To locate the desired cal constant or to go through the cal constants completely, briefly press the AUTO CAL button twice to turn Auto-Cal on and off. Each time Auto Cal is turned on and off, the Auto-Cal circuitry will attempt to decrement through the cal constants from 13 to Ø, and the return to constant 13.

NOTE

The AUTO CAL button should not be pressed on and off too fast or too slow, because the 3455A may remain in the same cal constant or advance past more than one cal constant. A few tries may be necessary to decrement one cal constant step each time.

Table 8-B-2. Auto-Cal Switch Closures.

	Test											
	11	10	9	8	7	6	5	4	3	2	1	Ø
A10Q2	X		X	X					X	X		
A10Q4		X										
A10Q15					X		X	X				
A10Q16						X					X	X
A10Q18			X						X			
A10Q19	X	X			X	X						
A10Q21				X			X	X		X	X	X
A10Q22			X	X								
A10Q27			X						X			
A10Q28			X						X			
A10Q29												X
A10Q31												X
A10Q32												X
A10Q33							X					
A10Q34					X	X		X				
A10Q35					X		X	X				
A10Q36											X	
A10Q38			X						X		X	X
A10Q39						X						
A10Q40						X						
A10K6					X	X	X	X				

X = Closed (ON)

Table 8-B-3. Gate Function in Auto-Cal.

Gates Used	Function
Q19	X1 Gain
Q21	X10 Gain
Q22	X2 Gain
Q28, Q28	X1 Buffer
Q29, Q31, Q32	TV Reference
Q36	10:1 Input to Ground
Q18	+ 100 Gain
Q38	10:1 Victual Ground
Q39	100:1 Attenuator
Q35	10:1 Attenuator
Q15	10:1 Attenuator to Input
Q16	100:1 Attenuator to Input
Q33	+ V Reference to Attenuator
Q34	Attenuator Input to Ground
Q2	Low Voltage Input to Ground
Q4	+ V Reference to Input

Table 8-B-4. Switch Driver Voltage Levels.

Designator	Pin No.	Test 0	1	2	3	4	5	6	7	8	9	10	11	12	13	Pin No.
U4	1	Ø	Ø	Ø	Ø	-24	-24	-24	-24	Ø	Ø	Ø	Ø	Ø	Ø	1
	2	-24	-24	-24	-24	-24	-24	-24	-24	Ø	Ø	-24	-24	-24	-24	2
	5	L	L	L	L	L	L	L	L	H	H	L	L	L	L	5
	7	H	H	H	H	L	L	L	L	H	H	H	H	H	H	7
	9	L	L	L	L	H	L	H	H	L	L	L	L	L	L	9
	10	L	L	L	L	H	L	H	H	L	L	L	L	L	L	10
	13	+9.5	+9.5	+9.5	+9.5	-24	+9.5	-24	-24	+9.5	+9.5	+9.5	+9.5	+9.5	+9.5	13
	14	-24	-24	-24	-24	Ø	-24	Ø	Ø	-24	-24	-24	-24	-24	-24	14
U5	1	-24	-24	-24	-24	-24	-24	-24	-24	-24	-24	-24	-24	-24	-24	1
	2	-24	-24	-24	Ø	-24	-24	-24	-24	-24	Ø	-24	-24	-24	-24	2
	5	L	L	L	H	L	L	L	L	L	H	L	L	L	L	5
	7	L	L	L	L	L	L	L	L	L	L	L	L	L	L	7
	9	H	H	H	L	H	H	L	L	H	L	L	L	H	H	9
	11	L	L	L	L	L	L	H	H	L	L	H	H	L	L	11
	13	-24	-24	-24	-24	-24	-24	Ø	Ø	-24	-24	+9.9	Ø	-24	-24	13
	14	+1	Ø	Ø	-24	Ø	+1	-24	-24	Ø	-24	-24	-24	+1	+1	14
U6	1	+1	Ø	-24	-24	-24	-24	Ø	-24	-24	-24	-24	-24	+1	+1	1
	2	-24	-24	-24	Ø	-24	-24	-24	-24	-24	Ø	-24	-24	-24	-24	2
	5	L	L	L	H	L	L	L	L	L	H	L	L	L	L	5
	7	H	H	L	L	L	L	H	L	L	L	L	L	H	H	7
	9	L	L	L	L	L	L	H	L	L	L	L	L	L	L	9
	11	L	L	L	L	L	L	L	L	L	L	H	L	L	L	11
	13	-24	-24	-24	-24	-24	-24	-24	-24	-24	-24	+9.9	-24	-24	-24	13
	14	-24	-24	-24	-24	-24	-24	Ø	-24	-24	-24	-24	-24	-24	-24	14
U8	1	-24	-24	-24	-24	-24	-24	-24	-24	-24	-24	-24	-24	-24	-24	1
	2	-24	Ø	-24	-24	-24	-24	Ø	-24	-24	-24	-24	-24	-24	-24	2
	4	H	L	H	H	H	H	L	H	H	H	H	H	H	H	4
	7	L	L	L	L	L	L	L	L	L	L	L	L	L	L	7
	9	L	L	L	L	L	L	L	L	L	L	L	L	L	L	9
	11	B	B	H	H	B	B	B	B	H	H	B	H	L	L	11
	13	-24	-24	Ø	Ø	-24	-24	-24	-24	Ø	Ø	-24	Ø	-24	-24	13
	14	-24	-24	-24	-24	-24	-24	-24	-24	-24	-24	-24	-24	-24	-24	14
U9	1	-24	-24	-24	-24	Ø	-1	-24	Ø	-24	-24	-24	-24	-24	-24	2
	2	-24	-24	-24	-24	-24	-24	-24	-24	-24	-24	-24	-24	-24	-24	2
	5	L	L	L	L	L	L	L	L	L	L	L	L	L	L	5
	7	L	L	L	L	H	H	L	H	L	L	L	L	L	L	7
	9	H	L	L	L	L	L	L	L	L	L	L	L	H	H	9
	11	H	H	H	H	H	H	H	H	H	H	H	H	H	H	11
	14	+9.5	-24	-24	-24	-24	-24	-24	-24	-24	-24	-24	-24	+9.5	+9.5	14

The symbols L and H refer to TTL logic levels where L is < .8 V dc and H is > 2.2 V dc.

d. To determine which cal constant is measured, connect a high input impedance DVM (10 V range input impedance > 10^{10} ohms) to one of the points shown in Table 8-B-5.

e. By stepping through the cal constants from constant 13 to 0 and monitoring one of the points in Table 8-B-5, every cal constant step can be located.

NOTE

The voltages listed in Table 8-B-5 are approximate and should only be used to locate Auto-Cal constants and for troubleshooting.

8-B-13. By using the cal constants stepping procedure in conjunction with Table 8-B-5, any one constant step can be located. When using this method and the 3455A is malfunctioning, or possibly two conditions in Table 8-B-4 may be inoperative. (Example: Readings at A10TP4 and TP2 are bad). It is very unlikely, however, that all four conditions are inoperative. If this should occur, then check the + 10 V reference and/or the inguard logics.

Table 8-B-5. Cal Constant Monitoring Points.

	13	12	11	10	9	8	7	6	5	4	3	2	1	0
Approximate A10TP4 Voltage	(X)	(X)	0	10	0	0	0	6	-10	0	0	0	0	10
Voltage at the Multiplexer Mode (Source of A10Q1)	--	--	--	10	--	--	--	--	--	--	--	--	--	--
Voltage at the Junction of A10K6 and A10R47	--	--	--	--	--	--	--	--	9.9009	--	--	--	--	--
A10TP2 Voltage	(X)	(X)	--	--	--	--	--	--	--	--	--	--	--	10

8-B-14. Switch Closure Table.

8-B-15. Most of the switch closures used in the 3455A are listed in Table 8-B-6. This table lists the previous closures dependent on the range, function, and Auto-Cal mode of the 3455A. For troubleshooting malfunctions of the various operations of the instrument, this table may be very helpful.

8-B-16. Auto-Cal Troubleshooting (Schematic 1, 7).

8-B-17. Most Auto-Cal failures also show up as dc failures and should be repaired first. These malfunctions usually show up as a failure in the self-test mode of the 3455A. The following are a couple of hints to troubleshoot these malfunctions.

a. Set the 3455A to the self-test mode and find out which cal constants are failing. Take the 3455A out of the self-test mode (press any other function button). Using the cal constants service procedure, go to the bad cal constant. While refering to the various tables and figures in this service group, troubleshoot the bad constant.

Table 8-B-6. 3455A DVM Switch Closures.

			Device Select 0 A10-U17						Device Select 2 A10-U16							Device Select 3 A10-U13							Device Select 4 A10-U12							Device Select 5 A10-U11							
		Switched Component	K1	TO	A C	B	O A R	D	Q21	Q4	Q39, 40	Q19	Q16	Q18, 27, 28	$\overline{Q36}$	Q38	Q33, $\overline{34}$	Q3	Q15, 35	Q22	Q29, 31, 32	Q2	Q13	Q14	Q1	K6	U33 Enable	K5	K8	K7	K9	K2, 4	K3					
		Switching Line	HAD1	HR12	HR24	HAC	HR34	LACF	HPD3	HMC2	HAD3	HPD2	HMC3	HPD1	LAC5	HAC2	LAC3	HMA1	HMD1	HPD1	HMC4	HMC1	HM02	HM01	HMD2	HAC1	HI06	HAD2	HI05	HI04	HI03	HI01	HI02					
Func	Range	Operation																																			
AC	1	AC-Fast	0	1	0	1	0	0	0	0	X	1	0	0	1	1	X	1	0	0	0	0	0	0	0	X	0	0	X	X	0	0	0					
AC	10	AC-Fast	0	1	1	1	0	0	0	0	X	1	0	0	1	1	X	1	0	0	0	0	0	0	0	X	0	0	X	X	0	0	0					
AC	100	AC-Fast	0	0	0	1	1	0	0	0	X	1	0	0	1	1	X	1	0	0	0	0	0	0	0	X	0	0	X	X	0	0	0					
AC	1000	AC-Fast	0	0	1	1	1	0	0	0	X	1	0	0	1	1	X	1	0	0	0	0	0	0	0	X	0	0	X	X	0	0	0					
AC	1	AC-Norm	0	1	0	1	0	1	0	0	X	1	0	0	1	1	X	1	0	0	0	0	0	0	0	X	0	0	X	X	0	0	0					
AC	10	AC-Norm	0	1	1	1	0	1	0	0	X	1	0	0	1	1	X	1	0	0	0	0	0	0	0	X	0	0	X	X	0	0	0					
AC	100	AC-Norm	0	0	0	1	1	1	0	0	X	1	0	0	1	1	X	1	0	0	0	0	0	0	0	X	0	0	X	X	0	0	0					
AC	1000	AC-Norm	0	0	1	1	1	1	0	0	X	1	0	0	1	1	X	1	0	0	0	0	0	0	0	X	0	0	X	X	0	0	0					
DC	.1	DC	1	0	1	0	1	0	0	0	X	0	0	1	1	1	X	0	0	0	0	0	0	0	1	X	0	0	X	X	0	0	0					
DC	1	DC	1	0	1	0	1	0	1	0	X	0	0	0	1	1	X	0	0	0	0	0	0	0	1	X	0	0	X	X	0	0	0					
DC	10	DC	1	0	1	0	1	0	0	0	X	1	0	0	1	1	X	0	0	0	0	0	0	0	1	X	0	0	X	X	0	0	0					
DC	100	DC	0	0	1	0	1	0	0	0	0	1	0	0	1	0	X	0	1	0	0	0	0	0	0	0	0	1	X	X	0	0	0					
DC	1000	DC	0	0	1	0	1	0	0	0	1	1	1	0	0	0	X	0	0	0	0	0	0	0	0	0	0	1	X	X	0	0	0					
Ω-2	.1 K	Unk.	1	0	1	0	1	0	0	0	X	0	0	1	1	1	X	0	0	0	0	0	0	0	1	X	1	0	1	1	0	1	0					
Ω-2	.1 K	Ref.	1	0	1	0	1	0	1	0	X	0	0	0	1	1	X	0	0	0	0	0	1	0	0	X	1	0	1	1	1	1	0					
Ω-2	1 K	Unk.	1	0	1	0	1	0	1	0	X	0	0	0	1	1	X	0	0	0	0	0	0	0	1	X	1	0	1	1	0	1	0					
Ω-2	1 K	Ref.	1	0	1	0	1	0	1	0	X	0	0	0	1	1	X	0	0	0	0	0	1	0	0	X	1	0	1	1	1	1	0					
Ω-2	10 K	Unk.	1	0	1	0	1	0	1	0	X	0	0	0	1	1	X	0	0	1	0	0	0	0	1	X	1	0	1	1	0	1	0					
Ω-2	10 K	Ref.	1	0	1	0	1	0	0	0	X	0	0	1	1	1	X	0	0	1	0	0	1	0	0	X	1	0	1	1	1	1	0					
Ω-2	100 K	Unk.	1	0	1	0	1	0	0	0	X	0	0	1	1	1	X	0	0	1	0	0	0	0	1	X	1	0	1	0	0	1	0					
Ω-2	100 K	Ref.	1	0	1	0	1	0	1	0	X	0	0	0	1	1	X	0	0	1	0	0	0	1	0	X	1	0	1	0	1	1	0					
Ω-2	1 M	Unk.	1	0	1	0	1	0	1	0	X	0	0	0	1	1	X	0	0	0	0	0	0	0	1	X	1	0	0	0	0	1	0					
Ω-2	1 M	Ref.	1	0	1	0	1	0	1	0	X	0	0	0	1	1	X	0	0	0	0	0	0	1	0	X	1	0	0	0	1	1	0					
Ω-2	10 M	Unk.	1	0	1	0	1	0	1	0	X	0	0	0	1	1	X	0	0	1	0	0	0	0	1	X	1	0	0	0	0	1	0					
Ω-2	10 M	Ref.	1	0	1	0	1	0	0	0	X	0	0	1	1	1	X	0	0	1	0	0	0	1	0	X	1	0	0	0	1	1	0					
Ω-4	.1 K	Unk.	1	0	1	0	1	0	0	0	X	0	0	1	1	1	X	0	0	0	0	0	0	0	1	X	1	0	1	1	0	0	1					
Ω-4	.1 K	Ref.	1	0	1	0	1	0	1	0	X	0	0	0	1	1	X	0	0	0	0	0	1	0	0	X	1	0	1	1	1	0	1					
Ω-4	1 K	Unk.	1	0	1	0	1	0	1	0	X	0	0	0	1	1	X	0	0	0	0	0	0	0	1	X	1	0	1	1	0	0	1					
Ω-4	1 K	Ref.	1	0	1	0	1	0	1	0	X	0	0	0	1	1	X	0	0	0	0	0	1	0	0	X	1	0	1	1	1	0	1					
Ω-4	10 K	Unk.	1	0	1	0	1	0	1	0	X	0	0	0	1	1	X	0	0	1	0	0	0	0	1	X	1	0	1	1	0	0	1					
Ω-4	10 K	Ref.	1	0	1	0	1	0	0	0	X	0	0	1	1	1	X	0	0	1	0	0	1	0	0	X	1	0	1	1	1	0	1					
Ω-2	100 K	Unk.	1	0	1	0	1	0	0	0	X	0	0	1	1	1	X	0	0	1	0	0	0	0	1	X	1	0	1	0	0	0	1					
Ω-4	100 K	Ref.	1	0	1	0	1	0	1	0	X	0	0	0	1	1	X	0	0	1	0	0	0	1	0	X	1	0	1	0	1	0	1					
Ω-4	1 M	Unk.	1	0	1	0	1	0	1	0	X	0	0	0	1	1	X	0	0	0	0	0	0	0	1	X	1	0	0	0	0	0	1					
Ω-4	1 M	Ref.	1	0	1	0	1	0	1	0	X	0	0	0	1	1	X	0	0	0	0	0	0	1	0	X	1	0	0	0	0	1	1					
Ω-4	10 M	Unk.	1	0	1	0	1	0	1	0	X	0	0	0	1	1	X	0	0	1	0	0	0	0	1	X	1	0	0	0	0	0	1					
Ω-4	10 M	Ref.	1	0	1	0	1	0	0	0	X	0	0	1	1	1	X	0	0	1	0	0	0	1	0	X	1	0	0	0	1	0	1					
CAL	Io	No Input	⊗	⊗	⊗	⊗	⊗	⊗	⊗	⊗	⊗	⊗	⊗	⊗	⊗	⊗	⊗	⊗	⊗	⊗	⊗	⊗	⊗	⊗	⊗	⊗	⊗	⊗	⊗	⊗	⊗	⊗	⊗	⊗					13
CAL	I ±	I Ratio	⊗	⊗	⊗	⊗	⊗	⊗	⊗	⊗	⊗	⊗	⊗	⊗	⊗	⊗	⊗	⊗	⊗	⊗	⊗	⊗	⊗	⊗	⊗	⊗	⊗	⊗	⊗	⊗	⊗	⊗	⊗	⊗					12
CAL	10 V	Offset	⊗	⊗	⊗	⊗	⊗	⊗	0	0	X	1	0	0	1	1	X	0	0	0	0	1	0	0	0	0	⊗	⊗	⊗	⊗	⊗	⊗	⊗					11
CAL	10 V	Gain	⊗	⊗	⊗	⊗	⊗	⊗	0	1	X	1	0	0	1	1	X	0	0	0	0	0	0	0	0	0	⊗	⊗	⊗	⊗	⊗	⊗	⊗					10
CAL	.5 V	Offset - Ω	⊗	⊗	⊗	⊗	⊗	⊗	0	0	0	0	0	1	1	1	X	0	0	1	0	1	0	0	0	0	⊗	⊗	⊗	⊗	⊗	⊗	⊗					9
CAL	5 V	Offset - Ω	⊗	⊗	⊗	⊗	⊗	⊗	1	0	X	0	0	0	1	1	X	0	0	1	0	1	0	0	0	0	⊗	⊗	⊗	⊗	⊗	⊗	⊗					8
CAL	100 V	Offset #2 X1	⊗	⊗	⊗	⊗	⊗	⊗	0	0	0	1	0	0	1	0	1	0	1	0	0	0	0	0	0	1	⊗	⊗	⊗	⊗	⊗	⊗	⊗					7
CAL	1000 V	Offset	⊗	⊗	⊗	⊗	⊗	⊗	0	0	1	1	1	0	0	0	1	0	0	0	0	0	0	0	0	1	⊗	⊗	⊗	⊗	⊗	⊗	⊗					6
CAL	100 V	Gain	⊗	⊗	⊗	⊗	⊗	⊗	1	0	0	0	0	0	1	0	0	0	1	0	0	0	0	0	0	1	⊗	⊗	⊗	⊗	⊗	⊗	⊗					5
CAL	100 V	Offset #1 X10	⊗	⊗	⊗	⊗	⊗	⊗	1	0	0	0	0	0	1	0	1	0	1	0	0	0	0	0	0	1	⊗	⊗	⊗	⊗	⊗	⊗	⊗					4
CAL	.1 V	Offset	⊗	⊗	⊗	⊗	⊗	⊗	0	0	0	0	0	1	1	1	X	0	0	0	0	1	0	0	0	0	⊗	⊗	⊗	⊗	⊗	⊗	⊗					3
CAL	1 V	Offset #1	⊗	⊗	⊗	⊗	⊗	⊗	1	0	0	0	0	0	1	1	X	0	0	0	0	1	0	0	0	0	⊗	⊗	⊗	⊗	⊗	⊗	⊗					2
CAL	1 V	Offset #2	⊗	⊗	⊗	⊗	⊗	⊗	1	0	0	0	1	0	0	1	X	0	0	0	0	0	0	0	0	0	⊗	⊗	⊗	⊗	⊗	⊗	⊗					1
CAL	1 V	Gain	⊗	⊗	⊗	⊗	⊗	⊗	1	0	0	0	1	0	1	1	X	0	0	0	1	0	0	0	0	0	⊗	⊗	⊗	⊗	⊗	⊗	⊗					0

CAL Constant Assigned Number

Note: X Indicates "Don't Care."

⊗ Indicates that the control line will be set the same as the prior measurement state.

b. If unable to repair the Auto-Cal failure, Table 8-B-6 may be helpful if applicable. The dc inoperative section paragraph 8-B-18 in this service group may also be helpful.

8-B-18. DC Inoperative (Schematic 1).

8-B-19. When the dc function of the 3455A is inoperative, it can also show up as an Auto-Cal failure. These failures should be serviced using the information in paragraph 8-B-3 to 8-B-15 in this service group. Some of dc and Auto-Cal failures may be serviced by using the following procedures.

Table 8-B-7. Possible Auto-Cal Failure Causes.

Cal Constants Failed													3455A Display	Possible Cause
13	12	11	10	9	8	7	6	5	4	3	2	1		Shorted A14U1d
	12		10					5	4	3			0	.0757 Open A14C2
	12			9				5	4	3				A10Q36 Shorted
		11	10	9	8	7	6	5	4	3	2	1	0	.0007 Gate Bias
		11	10	9	8	7	6	5	4	3	2	1	0	.0000 DC Pre-amp
		11	10	9	8	7	6	5	4	3	2	1	0	.0074 DC Pre-amp
		11		9	8	7	6	5	4	3	2	1	0	9.8438 A10Q4 Shorted
		11	10			7	6							.0000 A10Q19 Open
		11		9	8					3	2			A10U3
			10	9				5		3				9.7650 A10Q16 Shorted
			10					5					0	.0000 A14Q3 Open
			10	9						3			0	A10Q15 Shorted
			10				6	5				1	0	A10Q18 Shorted
			10	9				5					0	9.5703 A10Q2 Shorted
			10											2.5026 A10Q4 Open
			10											A10Q21 Shorted
				9	8					3	2			A10Q2 Open
				9		7	6	5	4	3		1	0	A10U18 or A10Q37
				9		7	6	5	4	3		1	0	Reference Supply
				9		7	6	5	4	3	2	1	0	A10Q29 and/or A10Q31 Shorted
				9				5		3			0	A10Q39 Shorted
				9						3				A10U3 or Open A10QA18
				9						3			0	A10Q35 Shorted
				9										A10Q27 Open
				9										A10Q27 Open
					8			5	4		2	1	0	A10Q21 Open
						7		5	4				0	A10Q27 Shorted
						7		5	4					A10Q15 Open
						7			4					A10Q3 Shorted or A10K5 Open
							6					1	0	A10Q16 Open
								5	4				0	A10Q28 Shorted
								5					0	A10Q22 or A10Q19 Shorted
								5						A10Q35 or A10K6 Open
								5						A10Q33 Open or A10Q38 Shorted
														6.7542 A14 Board or A10Q34 Shorted
														X.XXXX Where X is any number go to Service Group 6

8-B-20. Leakage and Other Various Malfunctions.

8-B-21. The following quick leakage test may be used to isolate most leakage failures.

a. Set the 3455A to the DCV function 10 V range, with Auto-Cal off.

b. Short and then open the input terminals of the instrument and note the change in readings on the display.

c. If the reading changes faster than .25 V per second, there is leakage on the multiplex node. If the reading on the display changes positively, either A10Q5 or Q17 may be leaky. If the change is negative, A10Q2, Q3, Q4, Q13, Q15, or Q16 may be leaky.

8-B-22. The test in the above paragraph, paragraph 8-B-21, is a quick leakage test and should find most leakage failures. A more thorough test involves checking zero and full scale voltages on all dc ranges. Start with the 10 V range and the other ranges in the following order: 1 V, 100 mV, 100 V, and 1000 V ranges. The following paragraphs contain the procedures which should be used for leakage failures.

8-B-23. 10 V Range or Constant 10 and 11 Fail.

a. Set the 3455A to the 10 V range, Auto-Cal on and short the input terminals. If the reading on the display is positive (more than 5 counts), A10Q1 may be leaky. If the reading is negative (more than 5 counts), Q2 may be leaky. To doublecheck for a defective Q1 and Q2, note the reading on the 1 V and 100 mV ranges. The bad reading should also be present on those ranges.

b. Apply + 10 V or -10 V to the input terminals of the 3455A. Make sure the readings are within specification. Check the reference voltages and adjust them, if necessary. A10TP8 should be + 10 V ± 100 μV and TP7 should be -10 V ± 20 mV. If the reference voltages are good and the instruments readings is low, A10Q4 may be leaky.

8-B-24. 1 V Range or Constant 0, 1, and 2 Fails.

a. For the 1 V range check, do the procedure as explained in paragraph 8-B-23a.

b. For the 1 V range full scale check, do the following:

1. With the 3455A set the 1 V range and Auto-Cal off, apply + 1 V to the input terminals. A voltage of + 1 V should appear on the multiplex mode and + 10 V should be at A10TP4. If the multiplex mode reading is bad, troubleshoot the input circuit. If the reading at TP4 is bad, make sure A10Q21 is turned on. Check for leaky Q22, CR12, CR13, or a defective U3. If TP4 reads good, set up the 3455A for the self-test mode by pressing the TEST button. Check for cal constant 0 failing and if it does, troubleshoot the failure by using the procedure of paragraph 8-B-10. Continue with the next step if constant 0 does not fail.

2. By using the procedure of paragraph 8-B-10, step to cal constant 0. Adjust the active attenuator for a zero reading, as read at A10TP1 (adjust R66). Measure the voltage at J3 pin 9 for exactly + 1 V. If the reading is low, Q39 or Q18 may be leaky. If the reading is good, check the operation of Q36. This can be done by changing the high voltage amp offset. The 1 V reading at J3 pin 9 should change, because the gain of the 1 V range is changed.

8-B-25. 100 mV Range or Constant 3 Fails.

a. For the 100 mV range zero check, do the procedure of paragraph 8-B-22a.

b. For the 100 mV range full scale check do the following:

1. Apply + 100 mV to the input of the 3455A. The instrument should be set to the 100 mV range with Auto-Cal. Measure for approximately + 10 V at A10TP4 and 1/10 of this voltage at TP5. TP2 and TP6 should read approximately the same as TP5. If the reading at TP5 and TP6 are incorrect, check the power supplies of U3 (pins 4 and 7). The supplies should have approximately the voltage at TP6 ± 5 V. Troubleshoot U3 and associated circuitry if necessary.

2. Adjust the high voltage amp (A10U18) to zero, as read at TP1 (adjust R66). Measure the voltage at the 10:1 divider (J3 pin 9) for exactly 1/10 the voltage at TP2. If this voltage is incorrect, Q16 or Q21 may be leakly.

8-B-26. 100 V Range or Constants 5, 4, and 7 Fail.

a. The active attenuator can be checked by applying + 10 V to the input of the 3455A. With the in-

strument set to the 100 V range and with Auto-Cal on, measure for any readings at A10TP1. If this voltage is incorrect, check the bias of the input FET's by shorting the drains of Q38 to the sources of Q38. TP1 should now read zero. The drains of Q37 should be approximately + 10 V and the sources of Q3 should read between + 1 V and + 2 V. Troubleshoot the active attenuator, if the readings are bad.

b. For the 100 V range zero check, set the 3455A to the 100 V range with Auto-Cal off. Adjust R66 for a zero reading at TP1. If unable to adjust for a zero voltage, check for a leaky C21, C22, C26, CR32, or Q37. If the zero reading is good, the 3455A should display 0 V ± 1 count, a short time after Auto-Cal is turned on. If an offset remains on the display, Q36 may be defective.

c. For a 100 V range full scale check, observe for a cal constant 5 failure, when the 3455A is in the self-test mode. If cal constant 5 fails, troubleshoot its circuitry by using the procedure of paragraph 8-B-11. If cal constant 5 passes, step to cal constant 5 by using the procedure of paragraph 8-B-11. If cal constant 5 passes, step to cal constant 5 by using the procedure of paragraph 8-B-11. Measure TP2 for approximately -1 V and measure for approximately -.1 V at the 10:1 divider (pin 9 of J3). Check for exactly + 10 V at the junction of R47 and Q33, and for + 9.9 V at the junction of R47 and K6. If + 10 V is measured at R47 and K6 instead of + 9.9 V or R63 may be open.

8-B-27. 1000 V Range or Constant 6 Fails.

a. For the 1000 V range zero check, remember that some of the same circuits are used in the 100 V range. The 100 V range zero and gain should be working before troubleshooting the 1000 V range. Check for the proper switch closures used in cal constant 6 (use the procedure of paragraph 3-B-11 to locate constant 6).

b. For a 1000 V gain check, use the procedure of paragraph 8-B-24b.

c. Set the 3455A to the 1000 V range with Auto-Cal on, and apply 1000 V to the input terminals. If the reading on the display changes intermittently from 100 counts to 200 counts, A10K5 or K6 may be breaking down. K5 and K6 can be checked by connecting channel A of an oscilloscope (set to 20 V/div) at the junction of R47 and K6.

WARNING

For safety, connect the scope probe to the 100 K resistor R47.

Connect channel B of the scope (2 V/div) to pin 10 of U24. Set the scope to the chop mode and trigger on channel B. If channel B indicates a 5 V spike when arcing occurs, as seen on channel A, then K6 may be breaking down. If the indication on channel B appears to be good, K5 may be defective. C21, C23, or the input node of Q37, may also be defective.

8-B-28. Various Other Malfunctions.

8-B-29. Shorted FET's.

a. Occasionally FET's on the multiplex node may short. Two ways can be used to isolate shorted FET's.

1. Measure the gate to on resistance with an ohmmeter.

2. Short the input of the 3455A and turn the high resolution and Auto-Cal functions off. While monitoring A10TP3 step through all the dc ranges (1 V, 10 V, etc.) and ac functions. Make sure Auto-Cal is turned off after every range and function change. If TP3 dips to -24 V, a FET may be shorted. Usually, the defective FET is normally turned off in that particular range or function.

b. If A10U1 gets very hot U1, Q2, Q13, or Q14 could possibly have their gates shorted to their can.

c. Shorted FET's and U1 may show up as on "OL" indication on the display of the 3455A. This condition can be checked by measuring the voltages at TP4. If the voltage reads approximately + 16 V or -16 V, then measure TP3. If TP3 appears to be floating or is at a -24 V level, short the multiplex node to ground. If the "OL" condition disappears, a FET on the multiplex node is shorted. Use the procedure of paragraph 8-B-29a, b to find the shorted FET. Some possible FET failures may be Q3, Q4, Q15, Q19, or Q21.

8-B-30. Other Troubleshooting Hints.

a. If either A10K5 or K6 sticks closed, it may damage the other relay. Both should be replaced.

b. A sticking K5 could also damage R47, when K6 closes.

c. If 9.9009 V is displayed on the 100 V and 1000 V ranges of the 3435A with the input open, A10K6 is probably shorted.

d. A10L1 should not be too close to R63. Arcing could occur for 1000 V inputs.

e. With Auto-Cal on and A10R66 adjusted, the instrument should temporarily indicate an offset on either the 1 V, 100 V, or 1000 V ranges. If the offset remains, Q36 may be open.

f. If all tests pass and the 100 mV range is out of tolerance, then A10Q28 may be open.

g. If all tests pass the 3455A reads zero volts on the 1000 V range with an input voltage, Q39 may be open.

h. If all tests pass and then 100 mV, 1 V, 100 V, and 1000 V ranges are out of tolerance, then A10Q29 or Q31 may be open.

i. If all tests pass and the 100 V and 1000 V ranges are out of tolerance, then A10Q4 may be open or K6 may be shorted.

j. If Auto-Cal constant 5 fails and the 100 V and 1000 V ranges are way out of tolerance, then A10R46 or R63 could have changed value.

k. If 17 V appears on the multiplex node, check for a defective A10Q15, Q18, CR12, or U12.

8-B-31. General Noise.

8-B-32. Noise in the 3455A may show up in one or more functions. If more than one function is noisy it usually indicates dc noise. The dc noise source should be found first, before troubleshooting any ac or ohms noise. Go to Table 8-3, to find the correct service group for ac and ohm noise.

8-B-33. DC Noise (Schematic 1, 5, and 6).

a. Equal amount of noise on all ranges: Noise of this nature is usually caused by the output of the dc amplifier (A10U2), the reference assembly (A11 or A20), or the A/D convertor (A14). The following two methods can be used to find noise causing circuits.

1. Try replacing the A/D convertor board (A14) with a known good one. If the noise disappears, go to Service Group E paragraph 8-E-14 for further troubleshooting. If the noise is still present or a good A/D board is not available, use the next procedure.

2. Set the 3455A to the 10 V with Auto-Cal off. Using a high impedance DVM (10 V input impedance > 10^{10} ohms), measure the 10 V reference at A10TP8. If the reference voltage is noisy, replace the reference assembly (A11 or A20). If TP8 is good, unsolder R38 at the multiplex node. With a clip lead, connect TP8 to the unsoldered end of R38. Measure the voltage at TP4. If TP4 is noisy, U2 and its output circuit may be noisy. If the voltage at TP4 is quit, the A/D convertor is most likely noisy. Go to Service Group E paragraph 8-E-14 for further troubleshooting.

b. Noisy on all ranges.

1. Check the + 10 V reference voltage at A10TP8.

2. Check all inguard power supplies for oscillations. Clock ringing on the supplies are normal and should be ignored. A defective A10U36 may be noisy.

c. Noise on positive input voltages only: Check the -10 V reference voltage at A10TP7 for noise. The 3455A should be in HOLD/MANUAL and with Auto-Cal off. The noise should not be greater than the + 10 V reference noise measured at TP8. If the -10 V reference is too noisy, replace U7.

d. Readings at 1/10 scale noisy and several counts low on any range: A14C2 may be defective.

e. Noise on the 100 mV range: Short the input of the 3455A with Auto-Cal off. Measure the voltage level at A10TP1. It the voltage is noisy, try replacing R69, R71, U18, or Q37. If TP1 is not noisy, measure with a DVM across TP5 and TP6. The low input of the DVM should be connected to TP6 and the high input to TP5. If excessive noise is measured, replace U3.

f. Noise and 5 counts to 10 counts turnover on the 1 V range: Replace A10R41 to R43.

g. 1000 V dc noisy: A10K5, K6, or R63 may be arcing inside. If K5 or K6 are replaced, replace both of the relays.

h. Various other possible noise repairs.

1. A10Q7 or Q8 may occasionally oscillate. Care should be taken when measuring with an oscilloscope. A probe connected to the output of U2 or the emitter of Q7 may cause oscillation.

2. A10U2 or Q6 may also cause noise.

3. Clean the front/rear input switch (S1).

SERVICE GROUP C

8-C-1. AC CONVERTOR TROUBLESHOOTING.

8-C-2. True RMS Convertor Servicing (Schematic 3).

8-C-3. Before troubleshooting the 3455A's True RMS Convertor, the instrument should operate properly in the dc mode. Verify for the correct operation of the dc section, before servicing the ac convertor. The following procedure should be followed before troubleshooting or repairing the ac convertor.

a. Check the dc operation of the 3455A. Verify for correct full scale and zero scale readings on all ranges.

b. Set the 3455A to the 10 V range, ac function, and short the input.

c. Check for approximate zero levels at A15TP8 and TP5, with the low input of the meter connected to TP6 (go to paragraph 8-C-4 or 8-C-6 if bad).

d. Short TP3 to TP6 and measure the voltage at TP1. TP1 should read approximately zero. Remove the short (go to paragraph 8-C-8 if bad).

e. Check for proper biasing of A15U2. The voltage at U2 pin 2 should be between -2 mV and -3 mV. Repad R21 if necessary (R21 padding list is in the parts list).

f. Remove the short form the input of the 3455A. Apply a 10 V, 100 Hz sinewave at the input terminals. Check for the following voltages.

1. With an oscilloscope, check for a sinewave at A15TP8. The amplitude of the sinewave should be approximately 2.8 V peak to peak with no shift in the dc level (go to paragraph 8-C-4 if bad).

2. A halfwave rectified sinewave should be observed at TP5. The amplitude of the waveshape should be approximately 1.4 V peak to peak, with no shift in the dc level (go to paragraph 8-C-6 if bad).

3. The waveshape shown below with an approximate + .75 V dc level, should be observed at TP4 (go to paragraph 8-C-8 if bad).

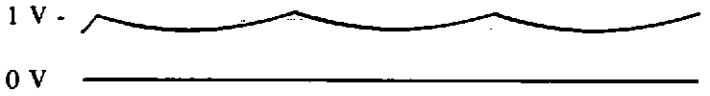

4. The waveshape shown below with an approximate -1 V dc level, should be observed at TP3 (go to paragraph 3-C-8 if bad).

5. Check for approximately + .5 V dc at TP2 (go to paragraph 8-C-8 if bad).

6. Check for approximately + 6.67 V dc at TP1 (go to paragraph 8-C-8 if bad).

7. Check for approximately zero volts at TP7 with the 3455A in the 10 V or 1000 V ranges. This voltage level should change to approximately -15 V when the instrument is switched to the 1 V or 100 V ranges (troubleshoot gain switching circuit, if bad).

g. If all the above checks are good and the 3455A displays approximately 10 V ac (with 10 V, 100 Hz input), the RMS convertor should be ready for calibration. If the reading is incorrect, A10Q3 may not be turned on or may be defective.

8-C-4. Preamplifier and Input Attenuator Circuitry.

8-C-5. The waveshape at TP8 appears to be incorrect, try the following checks (except where noted, the input signal should be a 10 V, 100 Hz sinewave).

a. Check for the correct power supply voltages at U6 pins 4 and 7. Pin 4 should have approximately -15 V and pin 7 should have approximately + 15 V.

b. Set the 3455A on the 10 V range and short the input terminals. Make sure TP8 can reach zero volts, when adjusting R65. If unable to reach zero, try changing R77 to 412 kΩ (part number: 0698-4540). If R77 is a 412 K resistor already, replace U6.

c. If the signal at TP8 is riding on a high dc level, make sure CR7 and Q20 are not touching any shielding. Also make sure Q19 is not touching the heat sink of U6. Check CR7 and Q20 for shorts.

d. If the zero reading at TP8 is good on the 10 V and 1000 V ranges and bad on the 1 V and 100 V ranges, try the following checks.

1. Check the gain switching circuitry of Q16 to Q19, and U5. Make sure TP7 reads approximately zero volts on the 10 V and 1000 V ranges. On the 1 V and 100 V ranges TP7 should read approximately -15 V.

2. If the gain switching is correct, lift the drain or source of Q19. Check for a zero reading at TP8 with the 3455A in the 1 V range. If the reading is good, replace Q19.

3. If the reading at TP8 is still bad, short the drain to the source of Q18. If the reading is then good, replace Q18.

4. If the reading at TP8 is still bad, short TP8 to the junction of R86 and R87. If the reading is corrected, troubleshoot the feedback network.

e. If the 3455A has a history of bad Q19's replace K1, K3, and Q18. Q18 may be damaged if Q19 has been damaged. The timing of K1 and K3 could be incorrect, causing Q19 to be destroyed by a 1000 V input. Check ac calibrator output for any spikes and make sure the 10^7 V Hz limit has not been violated.

f. If it becomes necessary to replace the matched set of resistors R76, R86, and R91, the new set should be properly aged. Do the following procedure.

1. Set the 3455A to the 10 V range and apply a 10 V, 100 Hz signal to the input. Note the reading on the display.

2. Apply a 1000 V at 100 Hz signal to the input. Leave the 1000 V connected for about two minutes.

3. Remove the 1000 V signal and reapply the 10 V at 100 Hz signal to the input. After a cooling down period (less than 2 minutes), the reading on the display should have not changed more than 25 counts from the reading in 1 above. Replace R76, R86, and R91 if necessary.

g. If it becomes necessary to replace the matched set of resistor R91 and R93, they also need to be aged. Use the procedure in f above. The only exception to the procedure is to have the aging done on the 100 V range rather than the 10 V range. A 100 V at 100 Hz signal should also be applied in place of the 10 V signal.

h. Other circuits on the A15 board may cause preamplifier malfunctions. The preamplifier can be isolated from the other circuits by lifting R52 and R64. If the preamplifier is working correctly, after

lifting R52 and R64, the other circuits are causing the malfunction (absolute amp, squaring amp, etc.).

8-C-6 Absolute Amplifier Circuitry.

8-C-7. If the waveshape at TP5 appears to be incorrect, try the following checks (except where noted, the input signal should be a 10 V, 100 Hz sinewave).

a. To check if other circuits on the A14 board causes failures in the absolute amplifier, the absolute amplifier can be isolated. This can be accomplished by lifting R52 and R53. The amplifier should now be operating correctly. Troubleshoot the amplifier circuit, if defective.

b. Check the power supply voltages at pins 4 and 7 of U7. Pin 4 should be approximately -15 V and pin 7 approximately + 15 V.

c. Check for an approximately 2.8 V peak to peak sinewave at U4 pin 6. Troubleshoot U6 and associated circuitry, if necessary.

d. If the sinewave at U4 pin 6 has oscillations, reduce C22 to 10 pF (part number in parts list). Do not reduce C22 below 10 pF, as the frequency response of the ac convertor may be affected.

e. The cathode/anode junction of CR5 and CR4 should have a sinewave with slight distortion at the zero crossover point. Replace CR4 or CR5, if necessary.

f. If the signal at TP5 is distorted, CR4 may have leakage. CR4 and CR5 can be interchanged.

g. If Q14 or Q15 appear defective, check with an ohmmeter and replace, if necessary.

8-C-8. Squaring Amplifier, Integrator, and Antilog Circuitry.

8-C-9. The squaring amplifier, integrator, and antilog circuits are connected by feedback paths. Isolation of these circuits may be difficult. There are, however, some checks used to help troubleshoot these circuits (except where noted, the input signal should be a 10 V, 100 Hz sinewave).

a. In some cases it is possible to isolate the integrator from the other circuits on the A15 board. This can be accomplished by shorting TP6 to the cathode of CR3. The reading at TP1 should be approximately zero. If there are great offsets at TP1, troubleshoot the integrator.

b. Apply a 100 mV, 100 Hz sinewave to the input terminals of the 3455A. The instrument should be in the 10 V range and display approximately .1000 V. Check for dc readings of + .82 V at TP4, -9 V at TP3, -.48 V at TP2, and + .067 V at TP1. These readings may be helpful in isolating the squaring amp, integrator, and antilog circuits.

c. Reapply a 10 V, 100 Hz sinewave to the input of the 3455A. The instrument should be on the 10 V range. Check for dc readings of approximately + .66 V at TP4, -1.15 V at TP3, -.6 V at TP2, and + 6.7 V at TP1. Again, these readings may be helpful in isolating the squaring amp, integrator, and antilog circuits.

d. Check the power supply voltages of U1, U2, and U3. Pins 7 of the op-amps should be approximately + 15 V and pins 4 should be approximately -15 V.

e. Check for a voltage drop of approximately + 3.3 V across R36. If this voltage drop is incorrect, Q12 or Q13 and their associated circuitry may be defective.

f. For parasitic oscillations at TP3 change R36 to 649 Ω (part number: 0698-4460).

g. If the display of the 3455A indicates an overload condition with a good waveshape at TP5,

short C13. The squaring amp circuit should now act like an emitter follower with a gain of one. Short the input of the 3455A and if the display indicates zero, Q9A or Q11A may be defective. If the instrument is still in overload, short the cathode of CR3 to TP6. If the overload condition disappears, the square root amp (U2 and associated circuits) or Q11B may be defective. If the overload condition remains, troubleshoot the integrator (U1 and associated circuits).

h. If Q9 or Q11 are replaced, R6 may need padding. With a 1 V, 100 Hz sinewave applies to the input of the 3455A, adjust R15 for a 1 V reading on the display. If R17 is out of range, R6 needs padding. If the reading is low, increase the value of R6. If the reading is high, decrease the value of R6. A change of 4 K ohms should change the reading about .5% (padding list is in the parts list).

8-C-10. AC/DC Operation.

8-C-11. When dc coupling is used with an ac input signal, the specifications of the True RMS convertor become wider. Make sure the instrument meets specifications before troubleshooting the ac convertor in dc coupling. Some troubleshooting hints for the ac/dc operation are given below.

a. Large differences between an ac and dc input signal with the 3455A set for ac/dc operation: - Match the betas of Q9 and Q11. To further help the performance of the ac convertor in dc coupling, add C40 (2.2 μF capacitor, part number: 0160-0128). A short procedure for the addition of C40 is as follows.

1. Remove CR3 and install pins into the eyelet holes where CR3 has been removed.

2. Solder both CR3 and C40 to the pins. Make sure CR3 is mounted in the correct direction.

b. Difficulty in balancing ac and dc input signals with the 3455A set for ac/dc operation: Try changing R55.

c. Large differences with the 3455A set for ac and ac/dc operation: change R95 to 806 ohms (part number 0698-3557).

8-C-12. AC Noise (Schematic 3).

8-C-13. Before checking for ac noise, verify that the dc readings are good. Troubleshooting for any dc noise must be done before troubleshooting for any ac noise.

8-C-14. Most noise on the ac convertor board can be isolated into certain areas of the board. The following procedure may be used to isolate those areas.

a. Apply a 10 V, 100 Hz sinewave to the input of the 3455A. Set the instrument to the 10 V range in the ac normal function.

b. With a DVM, measure the ac signal at TP8. It may also be possible to check the signal of TP8 with an oscilloscope, if the noise is great enough. If the signal is noisy, troubleshoot the input and preamplifier circuits of the ac convertor.

NOTE

Sometimes it is possible to check noise at TP8 with a DVM in the dc mode. The input of the 3455A has to be shorted with the DVM connected to TP8. There should be very little deviation noted.

c. With the 10 V, 100 Hz sinewave applied to the input terminals, measure the voltage at TP5 with a DVM in the ac mode. Again, it may be possible to measure the voltage with an oscilloscope. If the signal is noisy, troubleshoot the absolute amplifier circuits.

NOTE

It is also possible to check for noise at TP5 with a DVM in the dc mode.

Again, the input of the 3455A should be shorted and very little deviation should be noted.

d. Short the input of the 3455A and measure the dc voltage at TP3. If the voltage is very jumpy, troubleshoot the squaring amplifier circuits.

e. Short the cathode of CR3 to TP6 and measure the voltage at TP1. This voltage may jump around a little more than at the other test points. If the voltage is extremely jumpy, troubleshoot the integrator circuit. If the voltage is relatively steady, the antilog or square root circuit may be noisy.

8-C-15. The above procedure (paragraph 8-C-14) should isolate most areas on the ac convertor board that may cause noise. A few other hints and checks, given below, may be helpful for specific noise.

a. Noise on all ranges with the input shorted: Check for -2 mV to -3 mV at U2 pin 2. If the voltage is out of the correct range, it may cause a noisy zero indication. The padding resistor (R21) may have little or no effect in padding U2. This condition is usually caused by a leaky Q9B or CR2. Replace Q9 or CR2, if necessary.

b. Noisy when low frequency signal is applied to the 3455A: The fast ac switching circuitry may be defective. The following checks can be made to troubleshoot this circuit.

1. Apply a 1 V, 100 Hz signal to the input of the 3455A, with the instrument set to the 1 V range and to the normal ac function.

2. With an oscilloscope, check the signal at TP1. The signal should be approximately + 6.7 V dc, with no ripple. If the signal has ripple on it and the dc level is incorrect, perform the next step.

3. Set the 3455A to the fast ac function. Measure the voltage at the junction of R4 and R5 and the gate levels of Q2 and Q8. The voltage should be approximately -15 V dc. Next, set the 3455A to the normal ac function. The gate levels of Q2 and Q8 should be approximately zero, and the junction of R4 and R5 should be approximately + 15 V dc. The gate levels of Q3 and Q4 should be complimentary to the gate levels of Q2 and Q8.

c. Noisy in the fast ac mode: Check for a defective R9.

d. Other noise: If the 30 V regulator (A10U36) is defective, it may cause bursts of RF with heat. This may show up as noise on all functions and ranges of the 3455A. It would be, however, more noticeable in the ac function.

8-C-16. Miscellaneous Troubleshooting (Schematic 3).

a. 10 kHz reading high: Check for the correct high frequency padding of R89. In order to obtain optimum accuracy over the entire frequency range of the 3455A, R89 should be padded approximately 4000 counts high with a 1 V, 1 MHz input. Use the following procedure.

1. The 3455A should be turned on and warmed up for at least 1/2 hour. All shields and covers should be in place.

2. Perform the RMS convertor adjustment in Section V of this manual.

3. Apply a 1 V, 1 MHz sinewave to the input of the 3455A. Pad R89 for a reading approximately 4000 counts high. Check the accuracy of the ac convertor.

b. General hints: Give the ac convertor board a good mechanical inspection. Make sure all relays, op-amps, capacitors, and FETs are not touching the ground plane, shields, or each other.

c. Reading above 100 V erratic: Check for relay cases touching the ground plane.

d. Arcing at 1000 V ac: Check for capacitors touching the shield or ground plane.

e. Unable to adjust 100 V at 40 kHz, within limits: Moving the wire connecting the R92, C29, and C32, C34 modes away from the shield, may raise the reading.

f. The 100 V and 1000 V ranges inaccurate: The R92 and R93 resistor divider may have changed value. K1 - K3 contacts may be resistive.

g. Overload indication with a 1000 V at 1 kHz to 10 kHz sinewave applied to the input: A10K1, K2, or K5 may have developed leakage. The leakage can be isolated by removing the orange jumper from the front/rear switch connected to K1 and K5. If the overload condition disappears, K1 or K5 may be defective. If the overload condition remains, remove the jumper from K2 and connect the jumper directly to the input of the A15 board. If the overload condition disappears, K2 may be defective.

h. 1 V and 10 V ranges inaccurate and out of calibration: A15K3 may be shorted.

i. Full scale readings go high with an increase in temperature: A15Q9 or Q11 may be defective.

j. 1500 counts error on the higher ac ranges: Connect guard to low.

k. Differences in high frequency readings between the front and rear input terminals: Short the rear terminals' guard to low.

l. The ac convertor should be calibrated with the guard cover in place.

8-C-17. Average Responding AC Convertor (Schematic 2).

8-C-18. Due to the simplicity of the average responding ac convertors, only a few pertinent troubleshooting hints are given.

a. Component location and layout may be critical to the convertor's freqency response. Capacitors, especially in the input circuit, should not be too close or too far from the PC board. Make sure the relays are not touching the ground plane.

b. The ac convertor should be calibrated with the inguard cover in place.

c. A13Q15, U4, U5, and associated circuitry may occasionally fail.

d. To help flatten the frequency response of the convertor, especially at 10 kHz, C25 is usually padded with a 33 pF capacitor (pad list in the parts list). If unable to bring the level down at 10 kHz, a 28 pF capacitor may be used.

e. To help in troubleshooting the ac convertor, the following checks can be made.

1. Apply a 1 V, 100 Hz sinewave to the input of the 3455A, with the instrument set to the 1 V range.

2. U5 pin 6 should have a 1 V peak to peak sinewave and TP1 should have a 5 V peak to peak sinewave.

3. A 6.67 V dc voltage should be read at TP2. If this voltage is good and there is an incorrect reading on the display, A10Q3 may not be turned on or may be defective.

SERVICE GROUP D

8-D-1. OHM TROUBLESHOOTING (SCHEMATIC 1, 4).

8-D-2. Ohms Circuit Isolation.

8-D-3. Before troubleshooting the ohms convertor, the 3455A should be operating correctly in the dc mode. Because some of the dc and Auto-Cal circuits are used in ohms, there circuits should be checked before working on any ohms circuit. The procedure below may be helpful in isolating the ohms section of the instrument.

a. With the instrument set to the dc function, check the zero and full scale reading on the display. These checks should be made on all ranges (100 mV, 1 V, 10 V, 100 V, and 1000 V ranges). If any malfunctions occur, go to Service Group B for further troubleshooting.

b. Using the self-test mode of the instrument (see paragraph 8-B-3 for an explanation of the self-test), check for any Auto-Cal constant failure. Go to Service Group B if any constants fail.

c. If the dc readings on the instrument are good and the self-test passes, continue with this service group for ohms troubleshooting.

8-D-4. Ohms Servicing.

8-D-5. The following checks may be useful if the ohms function is completely inoperative.

a. Set the 3455A to the 2 wire ohms function, 1 K ohms range, and Auto-Cal off.

b. With no load applied to the terminals of the 3455A, check the voltage across the input terminals. The voltage should be approximately -4.7 V dc (typically -4.5 V to 4.8 V). If the voltage is incorrect, the ohms convertor board (A12) or the input relays may be defective. Go to paragraph 8-D-6 for further troubleshooting.

c. When approximately -4.7 V is observed at the input terminals, the ohms convertor is in voltage limit. This is a correct indication with an open circuit input. Connect a 1 K ohm resistor across the input terminals of the 3455A. Measure the voltage drop across the resistor. The voltage should be approximately -.7 V dc and indicates correct constant current operation of the ohms convertor. Go to paragraph 8-D-6 if the voltage is incorrect.

d. The above steps should isolate malfunctions in the current source circuitry of the ohms convertor. If all the steps indicate correct ohms operations, the miscellaneous troubleshooting section of this service group may be helpful (paragraph 8-D-8).

8-D-6. Ohms Convertor Troubleshooting (Schematic 1, 4).

8-D-7. Ohms convertor malfunctions may be caused by the ohms convertor board itself, or by the A10 mother board. It is important to remember that the mother board and ohms convertor have interconnecting ohms circuitry. Try the following procedure to troubleshoot ohms malfunctions.

a. With a dc voltmeter, measure the voltage across A12C1. The low side of the meter should be connected to TP - V and the high side connected to the plus side of C1. The meter should read + 19 V dc. If the reading is low by .5 V or more, A12T1 or A10T1 may be at fault.

b. With an oscilloscope, measure the ripple across A12C1. The ripple should not be more than .1 V peak to peak. If the ripple is too high, check A10T1, A12T1, C3, CR4, or C1.

c. If the voltage across A12C1 is very low or zero, look for an approximately 30 V peak to peak square wave at the anodes of CR3 and CR4. This signal should be around 31 MHz with the 3455A set

for 60 Hz line frequency. If the signal is nonexistant, check for an approximately 3 V peak to peak signal at A10U33 pins 9 and 12. If there is a signal at these pins, troubleshoot the circuit between the outputs of A10U33 and the secondary of A12T1.

d. If there is no signal at A10U33 pins 9 and 12, make sure the divider U31 and U33 are operating correctly. Also make sure U33 is enabled by line HI06. The inguard logic (Latch U12) may be defective, if the HI06 line is low.

e. If all the above checks are good and the power supply voltages at A12TP - V and TP + V are good, the other ohms circuits may be defective. Troubleshoot the ohms circuits on the A10 mother board first. Make sure the correct relays and FETs are turned on. Troubleshoot the current amplifier circuit and the voltage clamp amplifier circuit or the ohms convertor board.

8-D-8. Miscellaneous Ohms Troubleshooting Hints.

a. Table 8-D-1 may be helpful in troubleshooting various ohms malfunctions. The table gives various gain and reference resistor connections for all the ohms ranges.

b. 1 K range to 10 K range inoperative: Check for the correct operation of A10Q13.

c. 100 K range to 10 M range inoperative: Check for the correct operation A10Q14.

d. 2 wire ohms and 4 wire ohms not zeroing properly and the reading changes 100 counts when the 3455A is tapped: Check for a dirty front/rear switch.

e. 10 K and 10 M ranges read low: Check A10Q27, Q22, or U3.

8-D-9. Ohms Offsets.

8-D-10. The following information may be helpful in isolating ohms offsets. Again, make sure the 3455A works correctly in dc.

a. If there is a 150 counts to 200 counts offset on the 1 K ohm range, check A10K9. This relay should only be closed when the reference resistor is measured. If the 1 K ohm reading is low K9 may always be open. If the reading is high, K9 may be shorted.

Table 8-D-1. Ohms Gain and Switch Configuration.

Range in K Ohms	Ref Res	Ref Gain	Unk Res Gain	I (fs)	V Ref	V Unk (fs)	Relays Closed	Unk Res for V L
0.1	1 K	X10	X100	.7 mA	0.7	0.07	K7, 8	(> K)
1	1 K	X10	X10	.7 mA	0.7	0.7	K7, 8	(> K)
10	1 K	X20	X2	.5 mA	0.5	5	K7, 8	(> K)
100	1 M	X2	X20	5 μA	0.5	K8	0	(> 0)
1 K	1 M	X10	X10	.7 μA	0.7	0.7		(> M)
10 K	1 M	X20	X2	5 μA	0.5	5		(> M)

fs: denotes full-scale
VL: denotes Voltage Limited
2 Wire Ohm: K2, K4 Closed
4 Wire Ohm: K3 Closed

b. A quick offset check: Short either A10R59 or R61 and observe the reading of the 3455A. If the offset disappears with R59 shorted, A10Q13 and its associated circuitry may be leaky or defective. If the offset disappears with R61 shorted, A10Q14 and its associated circuitry may be leaky or defective.

c. If there is an offset on the 100 K ohm range, remove the blue wire connected to A10R59. If the offset disappears, Q13 may be leaky.

8-D-11. Ohms Noise (Schematic 1, 4).

8-D-12. To prevent possible damage to sensitive components being measured, the ohms current source of the 3455A is limited to 5 V. Lower currents are used to keep this voltage low. Because of the small currents, the ohms section of the instrument may be susceptible to noise.

8-D-13. Before troubleshooting for any ohms noise, make sure the dc noise level is good. Check for noise on all dc ranges of the 3455A. If the dc operation is good, troubleshoot for ohms noise. A few troubleshooting hints for servicing ohms noise are given below:

a. Excessive noise on all ranges: Check for a 19 V dc voltages across A12C1. If the voltage is low by .5 V, A12T1 or A10T1 may be at fault.

b. Readings decrease on each successive sample and then suddenly jump back, with the procedure repeating. The case of A10R63 may be touching the case of Q37.

c. Noise on the .1, 1, and 10 ranges: A10K9 may be defective.

d. Possible noise on the 100, 1 K, and 10 K ranges with very high readings at 1/10 scale: A12CR7 may be defective.

e. 1/10 scale reading on the 100 K range is noisy and low: Check for oscillation at A10TP4. This can be accomplished by setting the 3455A to the ohms function. The instrument should be on the 100 K range, with Auto-Cal off, and placed in Hold/Manual. TP4 should be monitored with an oscilloscope. Press the HOLD/MANUAL button and observe for any oscillation at TP4. If any oscillation is noted, try changing A10C4 to .0068 μF (part number 0160-0159) and A10R11 to 1.3 K (part number 0757-0426).

f. Noisy at 1 M and/or 10 M ranges: Push all wiring away from the ohms board and all input wiring away from the top guard cover. place the red wire, connected between the front/rear switch and the A10 board, next to the guard sheet metal. All wires should be kept away from transformers and transistors.

g. 10 M range very noisy: Make sure the 50/60 Hz switch is in the correct position.

h. Noise on the 1 K range: If noise shows up on older instruments, make sure on 18 guage teflon coated wire is installed in the instrument. The wire should be connected between pin E of A10J3 and the cardinal ground terminal located between K7 and K9. The wire may reduce noise on the 1 K ohms range as well as the 1 V ac and dc ranges.

i. Noise in ohms function: To reduce external noise in ohms function, shielded cables are very useful. When measuring resistance in the 2 wire and 4 wire ohms function, connect the resistor to the 3455A with one or more shielded cables. The shields should be connected to each low terminal. Most noise, associated with external body capacitance, should be shunted to ground rather than through the measuring instrumentation. The cables should not be reversed (the shields connected to the high terminals and the center conductor connected to the low terminals), or no shielded cables should be used. No shielded cables or reversed cables may cause excessive noise in ohms.

SERVICE GROUP E

8-E-1. A/D CONVERTOR AND INGUARD LOGIC TROUBLESHOOTING.

8-E-2. A/D Convertor Servicing (Schematic 6, 7).

8-E-3. Before troubleshooting the A/D circuits make sure the outguard section of the 3455A is operating correctly. Use the half-splitting method of paragraph 8-195. The following procedures may be used to check the correct operation of the A/D circuits.

a. Turn the 3455A off, and disconnect the A10W1 Inguard/Outguard Cable assembly from the outguard connector (A1J7).

b. Remove the analog test jumper (from A10U27 pin 10), and connect test point A10TP9 to ground.

c. Apply -10 V dc to the input terminals of the 3455A and turn the instrument on.

d. With an oscilloscope measure the waveform at A10TP1. The waveform should look like top waveform in Figure 8-E-1.

e. The correct waveform at TP1 generally indicates correct A/D operation. If, however, the A/D waveform is good and the A/D circuit is still inoperative, go to paragraph 8-E-7 for troubleshooting.

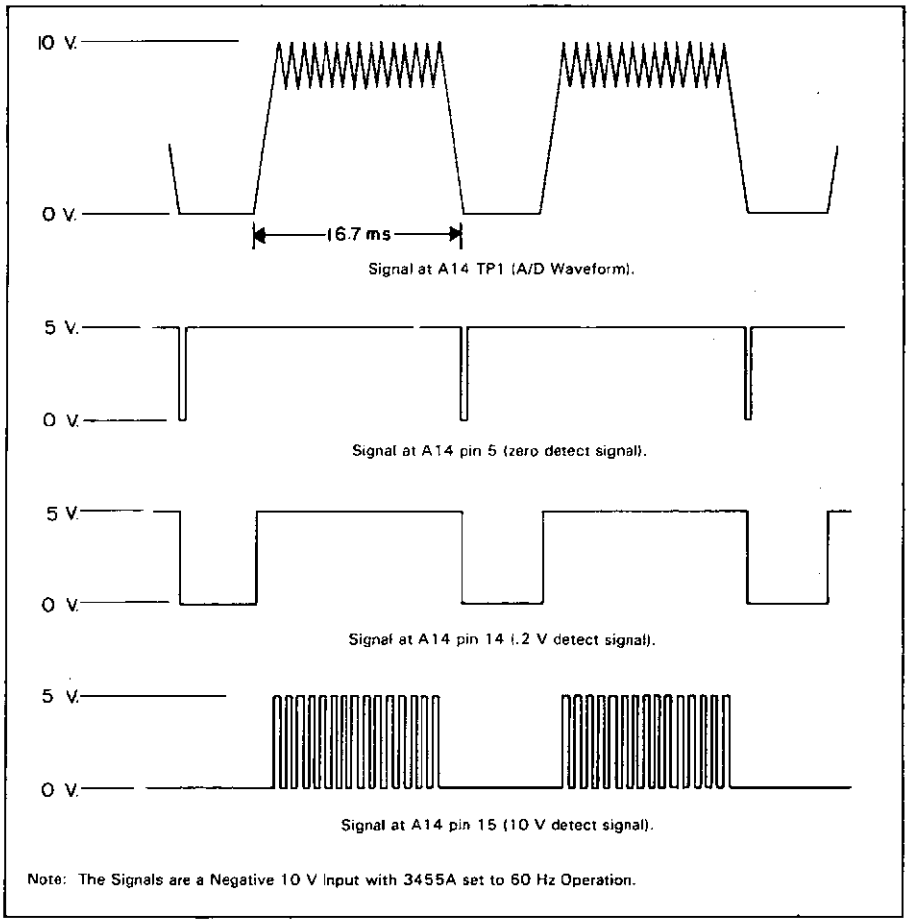

Figure 8-E-1. A/D Waveforms.

f. For no A/D waveform at TP1, go to paragraph 8-E-4 for troubleshooting. For an incorrect waveform go to paragraph 8-E-6.

8-E-4. No A/D Waveform.

8-E-5. Since the A/D waveform is dependent on various circuits in the 3455A (input, main amplifier, etc.), isolation of these circuits is necessary. The method used is simply a signal tracing method with limited operational checks.

a. Set up the 3455A using the procedure of paragraph 8-E-3a, b, and c.

b. Measure the voltage at the multiplex node (sources of A10Q1, Q2, Q3, and Q4). If the voltage is not -10 V dc, the input circuit may be inoperative. The multiplex node may also be loaded down by one or more FETs.

c. Measure for a -10 V dc voltage at A10TP4. If the voltage is incorrect, troubleshoot the main amplifier circuit. Make sure A10Q19 is turned on.

d. Measure the instrument's reference voltages. A10TP8 should be +10 V ± 100 μV and TP7 should be -10 V ± 20 mV. If the reference voltages are incorrect, troubleshoot the reference assembly (A11 or A20) and/or U7. The reference voltages are used on the A/D board and should be correct for proper A/D operation.

e. Short across capacitor A14C2 and measure the voltage at A14TP1. The voltage should be approximately zero. If there are any great offsets, troubleshoot A14U3 and associated circuits. If the voltage at TP1 is good, remove the short from C2 and continue with this procedure.

f. Short A14TP1 to ground and measure the 0 detect, 10 V detect, and .2 V detect levels. The table below gives the correct detect levels. Remove the short from TP1 and apply -10 V to TP1. Measure the levels of the 0 detect, 10 V detect, and .2 V detect. See the table below for the correct levels.

	A14TP1 Shorted	A14TP1 at -10 V
0 Detect Level	≅ 5 V	≅ 0 V
10 V Detect Level	≅ 0 V	≅ 5 V
.2 V Detect Level	≅ 0 V	≅ 0 V

If the levels in the table are incorrect, troubleshoot A14U4, 5, 6 and their associated circuits.

g. Other circuits on the A/D board may affect A/D operation. These circuits are the input circuits and diode array #1 and #2 and their associated circuits. Also make sure A14Q3, Q4, and their associated circuits are operating correctly. If these circuits appear to be working correctly, the in-guard logic may be at fault. Go to paragraph 8-E-10 for further troubleshooting.

8-E-6. Incorrect A/D Waveform.

a. Check for a leaky A14C2, Q5, U3, or U5 and associated circuits. Circuits past U4 may also be defective.

b. Circuitry preceeding the integrator may also cause an incorrect A/D waveform. Make sure A14Q2, Q4, and their associated circuits are operating correctly.

c. Check for correct operation of the detect circuitry. Paragraph 8-E-5f may be helpful in troubleshooting these circuits.

8-E-7. Correct A/D Waveform.

a. If the A/D waveform is correct and the A/D board is still inoperative, check the zero detect circuit. Make sure the zero detect signal is stable with the correct voltage levels (approximately 0 V or 5 V).

b. If the 0 detect signal of older instruments is unstable, modify the instrument in the following way:

1. Change A14R44 from a 10 M ohm resistor to a 2 M ohm resistor (part number 0683-2055).

2. Change A12R7, R8, R16, and R17 from 4.99 K to 10 K ohm (part number 0757-0442).

c. Check for the correct operation of A14U5 and its associated circuitry. Since U5 and its associated circuitry is an absolute amplitifer, the output of the amplifier (emitter of U6) should be the same as the signal at TP1. Therefore, pins 14 and 15 of the A14 board should also show the absolute value of the signal at TP1. The correct signals for a -10 V input to the 3455A are shown in Figure 8-E-1. If the signals at A14P1 pins 14, 15, and S are incorrect, troubleshoot the detect circuits.

d. Make sure any oxidation layers have not formed on the pins of the A14 board. The pins can be cleaned with a soft lead eraser.

8-E-8. A/D Noise (Schematic 6).

8-E-9. A/D noise will usually show up in all ranges and all functions of the 3455A. Two circuits to check for noise on the A/D board are the integrator and the input circuits.

a. Check for a noisy A14Q5 or U3. Make sure there are not oscillations present at TP1.

b. Check for a stable zero detect signal at A14U6 pin 1. If the signal is unstable, U4 or U6 may be noisy.

c. Check for a noisy A14Q3.

8-E-10. Inguard Logic Troubleshooting (Schematic 7).

8-E-11. Before troubleshooting the inguard logic make sure the outguard logic is operating correctly. Use the half-splitting technique of paragraph 8-195.

a. Check the back gate bias voltage (B.G.) of the processor (A10U26 pin 387). The voltage should be within ± .25 V of the voltage marked on the processor. If the voltage is incorrect, check for the correct value of pad resistor A10R105 (pad list in parts list). If the pad resistor is the correct value and the bias voltage is incorrect, replace the processor.

8-E-12. Inguard Logic Troubleshooting with no A/D Waveform.

a. The signals at A10U26 pins 34 to 37 should be the same as those on A3TP4 to TP1. The only exception is the signal at A10U28 pin 9. If the signals do not agree, check for malfunctions in the inguard light isolators, A10U34 and U35, plus their associated circuits. Line FØ and F1 transfer data from outguard to inguard (FØ is the data transfer line and F1 is the data transfer rate line).

b. If pin 9 of A10U28 is different than pin 37 of U26 and the HAZ line (pin 1 of U27) is low, the pulse transformer and/or associated circuits may be defective. This interrupt circuit can be checked by manually clocking A10TP10, and can be achieved by pulling TP10 low and then releasing it. If no toggling is taking place, troubleshoot the interrupt circuit consisting of A10U32A and U27. If there is toggling, check T2 or the outguard section (A1).

c. The interrupt request lines at pin 29 of A10U26 must be high. Troubleshoot the interrupt circuitry if necessary.

d. Data lines DØ to D7 (pin 18 to 35 of U26) and program address lines (PAØ to PA7 pins 1 to 8 of U26) should have voltage levels from approximately zero to approximately + 4.5 V. Check for any circuits causing these lines to be loaded down. It is possible and normal to observe sharp peaks of 3 V to 3.5 V on some lines of U26. These peaks are present when the line is in a tri-state mode. This is a possible and normal operation.

Table 8-E-1. Mnemonic Definitions.

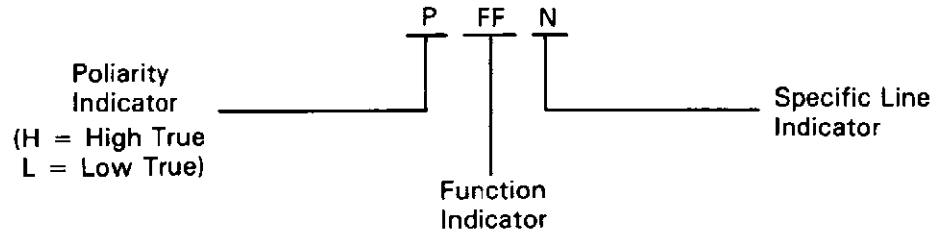

Mneumonic	Definitions
HAC	High True AC (AC Enable)
HAC1	High True Auto Cal 1(100 V, 1 kV Auto-Cal Constant [Cal Constant 4, 5, 6, 7])
HAC2	High True Auto Cal 2
HAD1	High True Analog DC 1 (.1 V, 1 V, 10 V Range and Ohms)
HAD2	High True Analog DC 2 (100 V, 1 kV Range)
HAD3	High True Analog DC 3 (1 k V Range)
HAZ	High True A/D Zero (Enables or Resets A/D)
HIO1	High True Input Ohms 1 (2 Wire Ohms Enable)
HIO2	High True Input Ohms 2 (Connects 4 Wire and Current Source)
HIP3	High True Input Ohms 3 (Ohms Ref Low Measurement)
HIO4	High True Input Ohms 4 (1 K Reference Resistor Select [with HIO5])
HIO5	High True Input Ohms 5 (.7 WA Current Source Select)
HIO6	High True Input Ohms 6 (Ohms Current Source Enable)
HMA1	High Measure AC 1 (Output from AC Converter Measured)
HMC1	High True Measure Constant 1 (Measures Ohms, .1 V and 1 V Offsets [Cal Constant 2, 3, 8, 9, 11])
HMC2	High True Measure Constant 2 (Measures 10 V Gain [Cal Constant 10])
HMC3	High True Measure Constant 3 (1 kV Range Enable [Cal Constant 0, 1, 6])
HMC4	High True Measure Constant 4 (Measures 1 V Gain [Cal Constant 0])
HMD1	High True Measure DC 1 (100 V Range)
HMD2	High True Measure DC 2 (.1 V 1 V, 10 V Range and Measure & Unk)
HMO1	High True Measure Ohms 1 (Measure Ohms Ref, Range 100 K, 1 M, 10 M)
HMO2	High True Measure Ohms 2 (Measure Ohms Ref, Range .1 K, 1 K 10 K)
HPD1	High True Pre-Amp DC 1 (x 20 and x 100 Gain)
HPD2	High True Pre-Amp DC 2 (x 1 Gain)
HPD3	High True Pre-Amp DC 3 (x 10 Gain)
HPO1	High True Pre-Amp Output (x 2 and x 20 Gain)
HPRF	High True Positive Rundown Fast (For Negative Input Voltage)
HPRS	High True Positive Rundown Slow (For Negative Input Voltage)
HR12	High True Range 12 (Sets AC Converter Range 1, 10)
HR24	High True Range 24 (Sets AC Contertor Range 10, 100)
HR34	High True Range 34 (Sets AC Converter Range 100, 1000)
LACF	Low True AC Fast (AC Fast Enable)
LAC3	Low True Auto Cal 3 (100 V, 1 kV Auto-Cal Constants [Cal Constant 4, 5, 6, 7])
LAC5	Low True Auto-Cal (1 kV Range and 1 kμ, 1 V Offset [Cal Constant 1, 6])
LNRF	Low True Negative Rundown Fast (For A/D Positive Input Voltage)
LNRS	Low True Negative Rundown Slow (For A/D Positive Input Voltage)
LVIN	Low True Voltage Input (Enables A/D Input)

e. The clear line of A10U15 pin 1 should have an approximately + 5 V level. Troubleshoot U9, U19, and their associated circuits.

f. Check for a clock signal at A10U15 pin 9. If the signal appears to be good, the processor (U26) and/or the ROM (U25) may be defective. If the clock signal is missing, check for 500 nano second pulses at the device select lines of U26 (pins 12 to 15). If the pulses are good, U14 may be at fault.

8-E-13. Inguard Logic Troubleshooting with an A/D Waveform.

a. Check the light isolators and associated circuits as explained in paragraph 8-E-12a.

b. Check for a defective A10U26.

c. Check for an open A10CR41 and CR42. These diodes may cause glitches on U26 pin 29, causing the processor to be interrupted continuously.

SERVICE GROUP F

8-F-1. OUTGUARD LOGIC TROUBLESHOOTING (SCHEMATIC 8, 9, 10).

8-F-2. Outguard logic troubleshooting should be done using the Signature Analysis Routines (SA) in Figures 8-H-20 to 8-H-27. If any incorrect signatures are observed, the following checks may be helpful.

a. If any incorrect signatures are observed check for a 1 μF capacitor across A1U49. Install one if missing (part number 0180-0291). The capacitor should be installed to the underside of the A1 motherboard, with the + terminal to pin 14 of U49 and the - terminal to pin 7 of U49.

b. If no stable signature can be located and the A3 board has been replaced, check the IC signals. Make sure they are toggling with good logic highs and lows (approximately 4 V peak to peak).

c. Check for the waveform shown below at the junction of A1C29 and R42. If this signal is missing, C29 may be defective. U48 may also cause the missing signal.

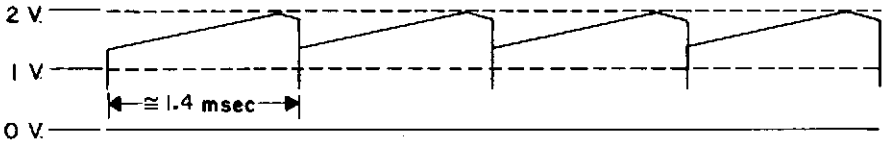

8-F-3. Main Controller Troubleshooting (Schematic 8).

a. Data lines DØ to D7 (pins 18 to 25 of U3U9) and program address lines PAØ to PA9 (pins 1 to 8 of U9) should have voltage levels approximately + 4.5 V peak to peak. Check for any circuits that may cause loading.

b. Sharp peaks of 3 V to 3.5 V may be observed on some lines of the processor (A3U9). This is normal. The peaks are present when the processor is in a tri state mode.

c. Check the back gate bias voltage (G.B.) of the outguard processor (A3U9). If the voltage is different from the voltage marked on the processor (by ± .35 V) check for the correct value of the padding resistor A3R3. If R3 is the correct value and the bias is incorrect, replace the A3 board. The correct value of R3 is listed in the following table.

G.B.	A3R3	-hp- Part No.
-5.0 V	4.64 kΩ	0698-3155
-4.5 V	2.87 kΩ	0698-4436
-4.0 V	1.96 kΩ	0698-0083
-3.5 V	1.00 kΩ	0757-0280
-2.5 V	715 Ω	0698-3700

8-F-4. Front Panel Troubleshooting.

8-F-5. Front Panel Operation Check.

a. Turn the 3455A off. Place the instrument in the SA mode by disconnecting the test jumper on the A3 board and disconnect the plug from A1J7.

b. Turn the 3455A on. Half of the instruments from panel LEDs should alternately turn on and off with the other half.

c. At the time the instrument is turned on and half the front panel LEDs turn on, a 0 should be indicated on the left side of the display. The 0 should move one position to the right each time the LEDs change. When the 0 reaches the far right of the display, a .0 will start at the left and move to the right.

d. The same operation takes place for 1, .1, 2, .2, 3, .3, after the .0 has moved to the far right of the display. If any of the LEDs do not light, replace them or troubleshoot their drive circuits. If some numbers of the display are bad, troubleshoot the display and associated drive circuits.

8-F-6. Front Panel Servicing (Schematic 10).

a. If the display blanks out any zeroes, try replacing A1U62.

b. The proper operation of the front panel buttons can be checked by monitoring A1U57 pin 14. The level at pin 14 should go low (TTL) low, any time a front panel button is pressed. If this is not observed, try replacing U57.

c. If the front panel buttons do not operate, check for a high level (TTL high) at A1J8 pins 2 and 3. A high level at any of these pins will disable some of the front panel buttons. Check for the correct operation of A1U51, U50, or U53.

d. If the front panel has a sticky switch, try the following: With a low temperature soldering iron, heat the solder connection of the LED within the switch. While the solder is warm, push the button in and out several times. This should straighten out the LED and relieve any pressure on the switch.

e. If the procedure in the precendent paragraph does not relieve sticky switches, change LEDs A2CR5 to CR11, CR19 to CR22, and CR24 to CR35 from -hp- part number 0990-0547 to -hp- part number 1990-0665. These changes should be made for instruments with serial number 1622A01336 and below. A procedure for changing or replacing LED's are in paragraph 8-F-7.

f. A modification to reduce key bounce is as follows: Change A1U57 from a 9318 to 98L18 (part number: 1820-0987), A2R17 and R18 from a 2.2 K ohm resistor pak to a 10 K ohm resistor pak (part number: 1810-0206). This change should be made for instruments with serial number 1622A00906 and below.

NOTE

Switch bounce can be observed by pressing the ENTER Z button and then pressing the MATH OFF button only once. If two 2's are displayed, the 3455A has key bounce.

g. For all other front panel malfunctions use Troubleshooting Diagram 8-H-26.

8-F-7. Front Panel LED's Switch, and Key Cap Replacement Procedure.

a. Removal Procedure.

1. Remove front frame which is held by 8 screws.

2. Disconnect two connectors between front panel and left side of instrument.

3. Remove front panel and ON/OFF switch.

4. Remove 11 screws holding Display/Switch board to front panel and remove Display/-Switch (D/S) board.

5. Pull key cap off switch body.

6. With knife or punch, cut off or punch through the red switch body mounting studs (clean excess plastic off to prepare holes for new switch).

7. Hold display board upside down with key facing down and heat LED terminals to let bad LED fall out.

8. Suck out solder holes to prepare for new LED.

b. Replacement Procedure.

1. Mount the switch body on the D/S board and be sure the body is aligned with the other switches (NOTE: very important as the switch may bind if it is not straight).

2. Using a medium temperature, broad, tip soldering iron or woodburning tool, carefully melt the plastic studs down into a little dome to secure the switch body.

3. Insert LED with shorter leg toward top of board. Make sure LED is flush with the board.

4. Replace key cap.

5. Depress key all the way to seat LED in place, and then solder LED using a minimum of solder.

6. Hold D/S board so keys point up and reheat LED terminals to allow solder to flow away from switch.

7. Depress key several times to make sure key does not stick. if it sticks, repeat (6).

8. Remount D/S board on front panel frame.

9. Plug both connectors back into main board.

10. Remount front panel to chassis.

11. Replace ON/OFF switch.

NOTE

Remember to try steps (6) and (7) of "Replace" before replacing switch; it could save time. It is important to use a low or medium temperature tip soldering iron, as exposure to 500°F for over 3 seconds could damage the LED's.

8-F-8. HP-IB Troubleshooting (Schematic 9).

8-D-9. Before troubleshooting the HP-IB section of the 3455A, verify that the 3455A is malfunctioning and make sure the "problem" is not due to external programming (see Section III of this manual).

a. If incorrect data is sent over the HP-IB lines, make sure the data is different than what is displayed on the front panel. If the data is the same, the instrument's HP-IB Section is not at fault.

b. Check for a bad connection between the instrument's HP-IB connector (J3) and the connector of the HP-IB cable. Clean both connectors, if necessary. Use a good freon based contact cleaner. Also, make sure the HP-IB cable external to the instrument is good.

c. Use the HP-IB SA Troubleshooting Diagram (Figure 8-H-27) for most of the HP-IB Section of the 3455A. SA can check most of this section, except for the HP-IB lines themselves. Use the 59401A Bus System Analyzer for these lines.

d. Check decoders A1U19, U20, or U11.

SERVICE GROUP G

8-G-1. MISCELLANEOUS TROUBLESHOOTING.

8-G-2. Power Supplies (Schematic 11).

a. In many of the 3455A's power supplies, the voltage reference of one supply is the output of another. This arrangement ties the voltages of the two supplies together. A shift in one supply is reflected in the other supply.

b. To isolate dependent supply circuits, the reference supplies should be separate from each other and from the circuits they supply. The following steps may be used.

1. Use external supplies to provide a reference to dependent supplies.

2. Use external supplies to drive circuits in place of internal supplies.

c. Following are some voltages of the inguard power supplies.

1. Main power supply voltages.

A10TP11: +9 V to +11 V
A10TP12: +19.5 V to +23.5 V
A10TP13: -19.5 V to -23.5 V
A10TP14: +38 V to +44 V
A10TP15: -38 V to -44 V
A10TP+9: +8.1 V to +9.9 V (Inguard processor must be installed).

2. Ohms supply voltages

A10T1 pins 1 and 3: 10 V rms (20 V peak to peak) square wave.
A10T1 and A12T1 connection: .2 V rms (.25 V open circuit) square wave.
A12T1 pins 1 and 3: 40 V rms (80 V peak to peak) square wave.

3. Allowable noise on the ohms supply as measured with a true rms voltmeter.

+6.2 V supply: 30 μV noise
-6.2 V supply: 60 μV noise

d. If the fuse of the 3455A keeps opening, check the A10 board power supply breakdown diodes (A10CR64, 66, etc.). Also, make sure the 3455A has been switched to the correct line voltage.

e. Table 8-G-1 lists the various components and assemblies which uses the individual power supplies. This table may be useful if a power supply is loaded down by a defective component or assembly.

Table 8-G-1. Power Supplies Locations.

Power Supplies	U1 to U35 (Integrated Circuits and OP Amps)																																Assemblies			Transistors (Q)		
	1	2	4	5	6	7	8	9	11	12	13	14	15	16	17	18	19	21	22	23	24	25	26	27	28	29	31	32	33	34	35	A/D	Ref	AC	2	5	4	1	46
+30 V	X	X														X																X							
-29.3 V																																	X						
+15 V						X																										X		X		X			
+9 V																							X																
+5 V									X	X	X	X	X	X	X		X	X	X	X	X	X	X	X	X	X	X	X	X	X	X			X			X	X	
-24 V	X		X	X	X		X	X								X																X							
-15 V						X																										X	X	X					
-2 V																					X																		

8-G-3. Reference Assembly (Schematic 5).

a. The reference assembly of the 3455A is on the exchange program and should be returned to the

nearest -hp- Service Office, if inoperative. The only checks that can be made are the following.

1. If the reading on the display jumps 10 or 100 counts when adjusting any adjustments on the reference assembly, the wiper of the pot may be dirty. Work the adjustment screw of pot back and forth to clean the wiper.

2. Make sure an oxidation layer has not formed on any pins of the assembly printed circuit board. The pins can be cleaned with a soft lead eraser.

3. Typically, the maximum noise allowed on the reference voltages (use a DVM with input Z $> 10^{10}$) are 20 μV for the + 10 V reference and 30 μV for the -10 V reference. Replace the assembly if excessive noise is present.

4. The + 10 V reference voltage at A10TP8 should be adjustable to + 10 V ± 100 μV and the -10 V to -10 V + 20 mV. Replace the assembly if both the + 10 V and -10 V are not adjustable. Replace A10U7 if only the -10 V reference is incorrect.

8-G-4. Turn-Over Errors (Schematic 1, 5, and 6).

8-G-5. Turn-over errors are present when, for example, a positive input reading is good and the negative input reading is out of tolerance. This can be checked by taking a positive reading and then reversing the input leads. The following are a few turn-over checks and hints.

a. When checking for turn-over errors, the 10 V range and zero offsets should be the first things to check.

b. Check the A/D converter (A14) if turn-over differences are observed. Replace, if necessary.

c. Turn-over errors on all ranges: Unsolder CR1 and CR2 from the A10 board. If the error disappears, CR1 and/or CR2 may be leaky. Make sure the + 10 V and -10 V references are good (A10TP8 should be + 10 V ± 100 μV and A10 TP7 should be -10 V ± 20 mV).

d. Turn-over differences on the 10 V range: Check A10U1, U2, Q7, or Q18. Other possible causes may be K1, A1, Q2, Q4, Q19, and their associated circuits.

e. Turn-over errors on the top three ranges: Check A10K6 and Q15.

f. Turn-over differences on the 100 V and 1000 V ranges: Lift A10Q9 and CR29. If the error disappears, CR31 and/or CR29 may be leaky. Do the same with CR16 and CR17. Q8 may also be defective.

g. The FETs connected to A10TP2 may cause turn-over errors, if leaky. Q40 may also be leaky.

h. If the negative readings are good and all positive readings above 20 V are unstable on the 100 V range, check A10Q36.

8-G-6. Other Troubleshooting (Schematic 8 and 11).

a. If the instrument fails to sample in the dc volt, high resolution mode and the ac volt normal resolution mode, check A1C29 or U48.

b. If the HP-IB operation is intermittent with the instrument's LED's dim, make sure the 50/60 Hz switch is in the correct position.

c. If the fan refuses to spin after repeated turn-ons, change A1R15, 19, and 24 from 11.8 kΩ to 13.3 kΩ (0757-0289). This change should not be made on operating fan circuits.

d. A good fan measures approximately 30 Ω between the brown and yellow wires of the fan. A defective fan will usually measure between 10 Ω and 15 Ω.

SERVICE GROUP H

8-H-1. TROUBLESHOOTING DIAGRAMS.

8-H-2. The following diagrams in this service group may be used to troubleshoot the 3455A in place of the other service groups. These diagrams are separated into three groups. The first group is a General Troubleshooting Diagram which can be used to isolate the two main sections of the instrument (Inguard and Outguard). The second group deals with the Inguard section and the third group can be used for Outguard Troubleshooting.

8-H-3. General Troubleshooting Diagram.

8-H-4. The General Troubleshooting Diagram (Figure 8-H-2) may be used in place of the Half-Splitting Technique of paragraph 8-196. Since this method is not as complete as the Half-Splitting Technique, use it only if an extra 3455A or if an Inguard/Outguard Service Cable is not available.

8-H-5. Inguard Troubleshooting Diagram.

8-H-6. Diagrams 8-H-3 thru 8-H-19 in this group can be used to troubleshoot the Inguard section of the 3455A. A troubleshooting procedure for the Inguard/Outguard Transfer Circuitry is also included.

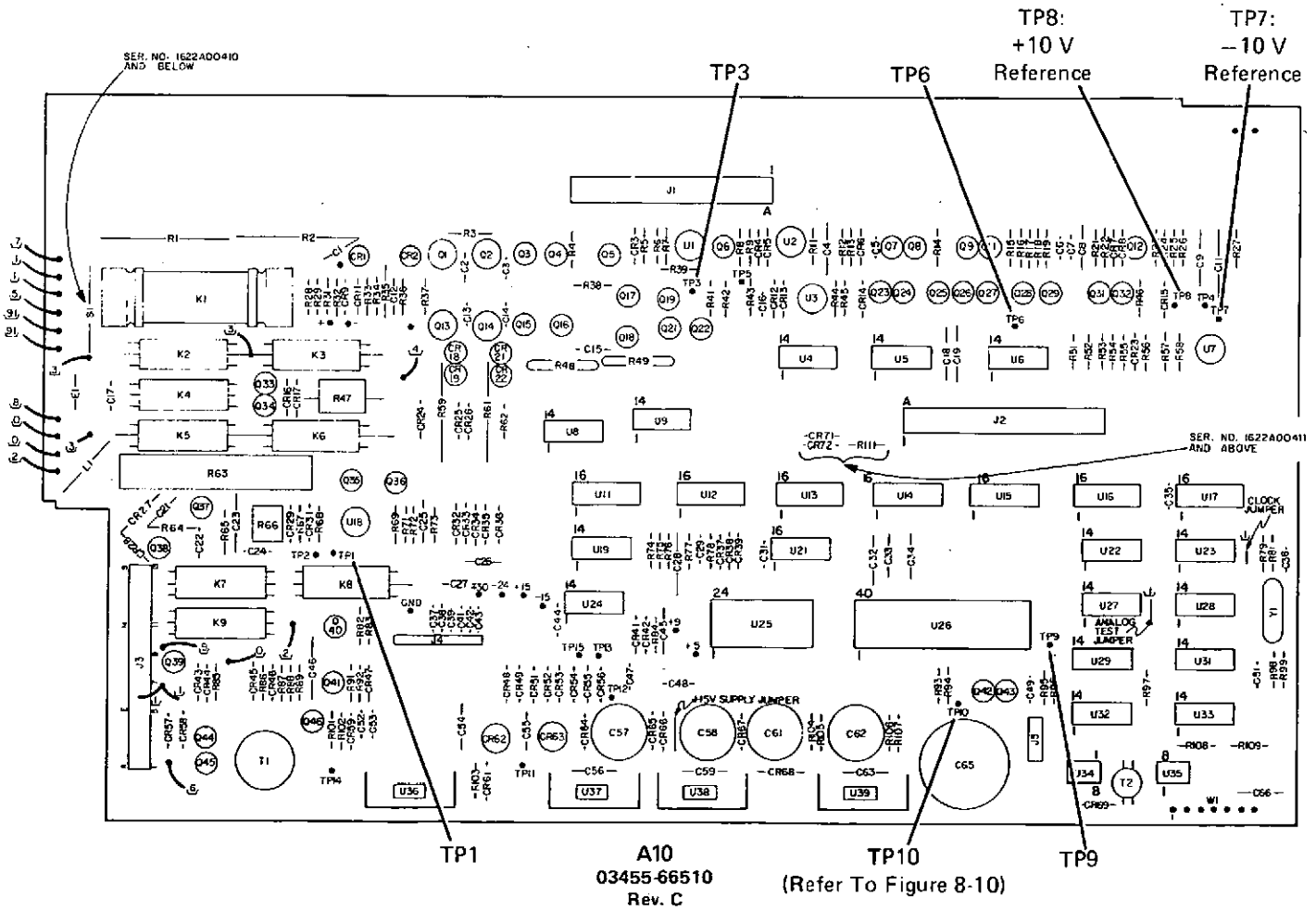

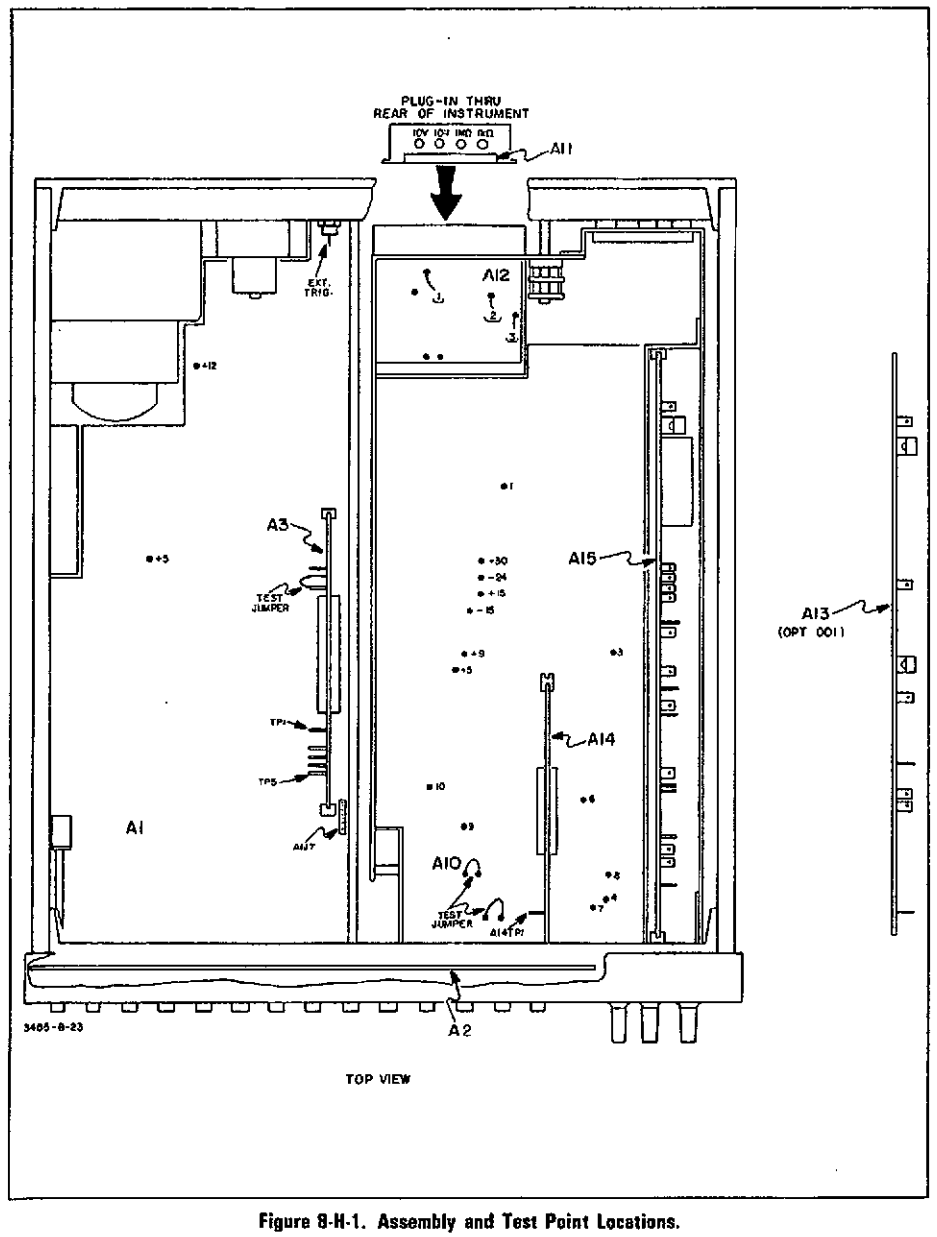

Figure 8-H-1. Assembly and Test Point Locations.

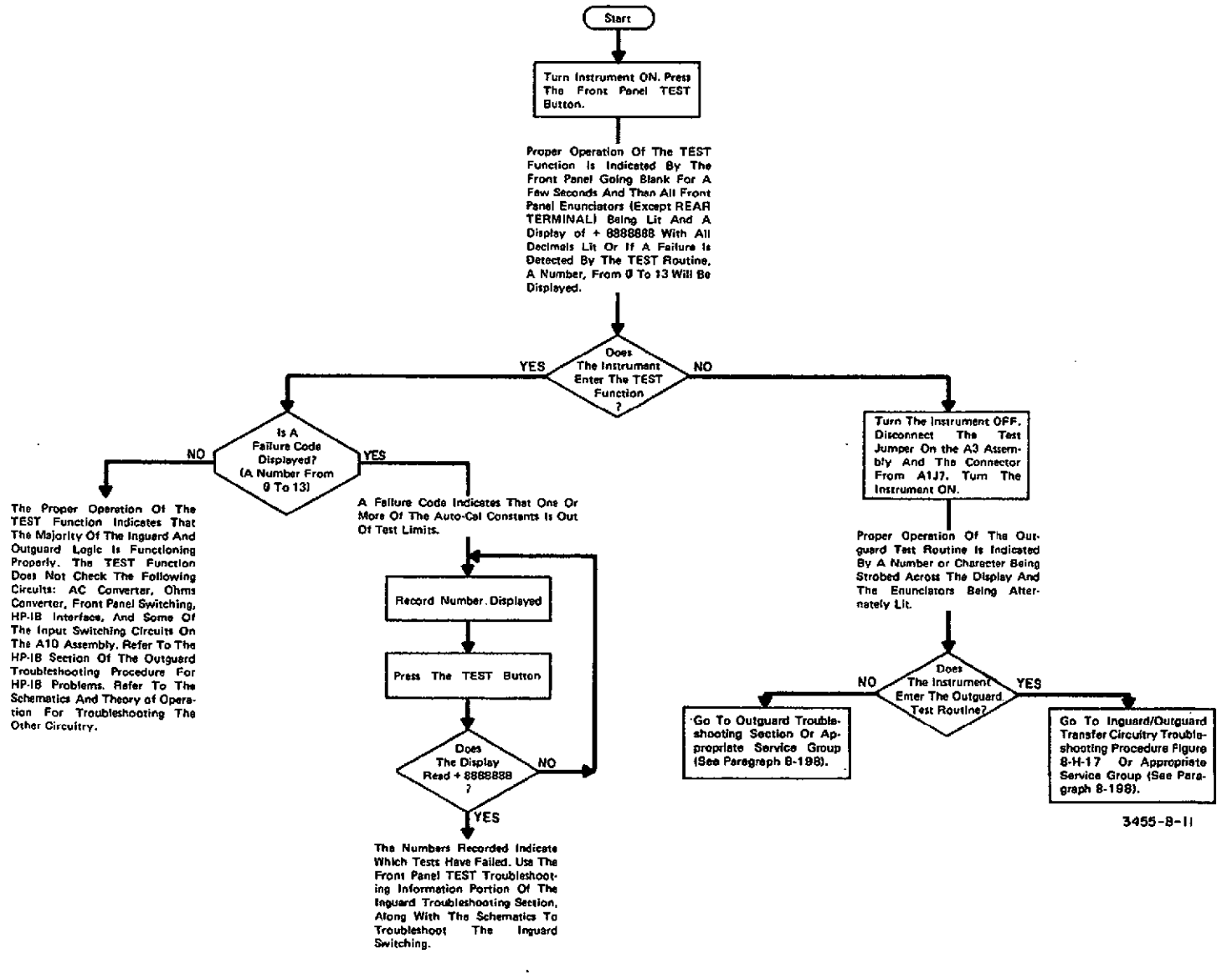

Figure 8-H-2. General Troubleshooting Procedure Diagram.

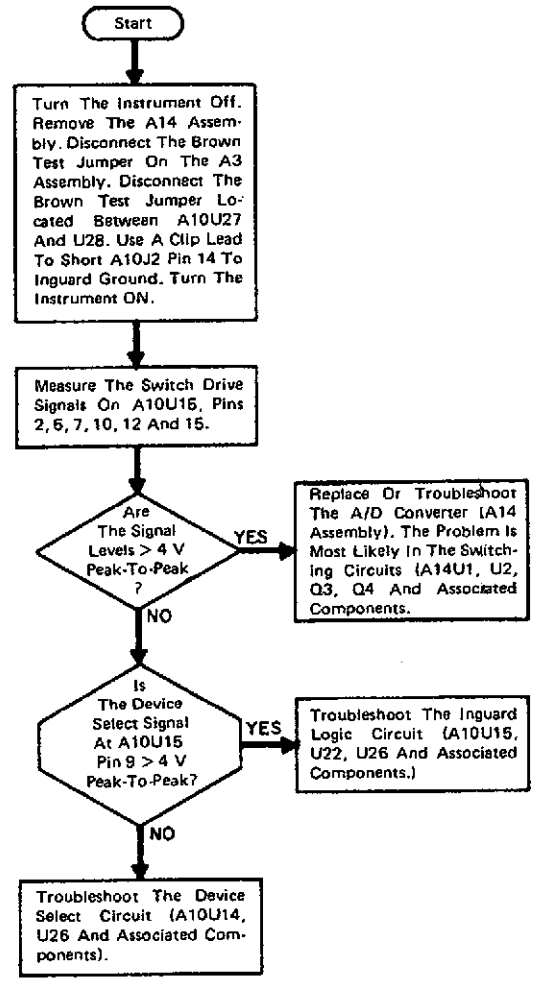

Figure 8-H-3. Inguard Troubleshooting Procedure Diagram, Auto-Cal Circuitry TEST 13.

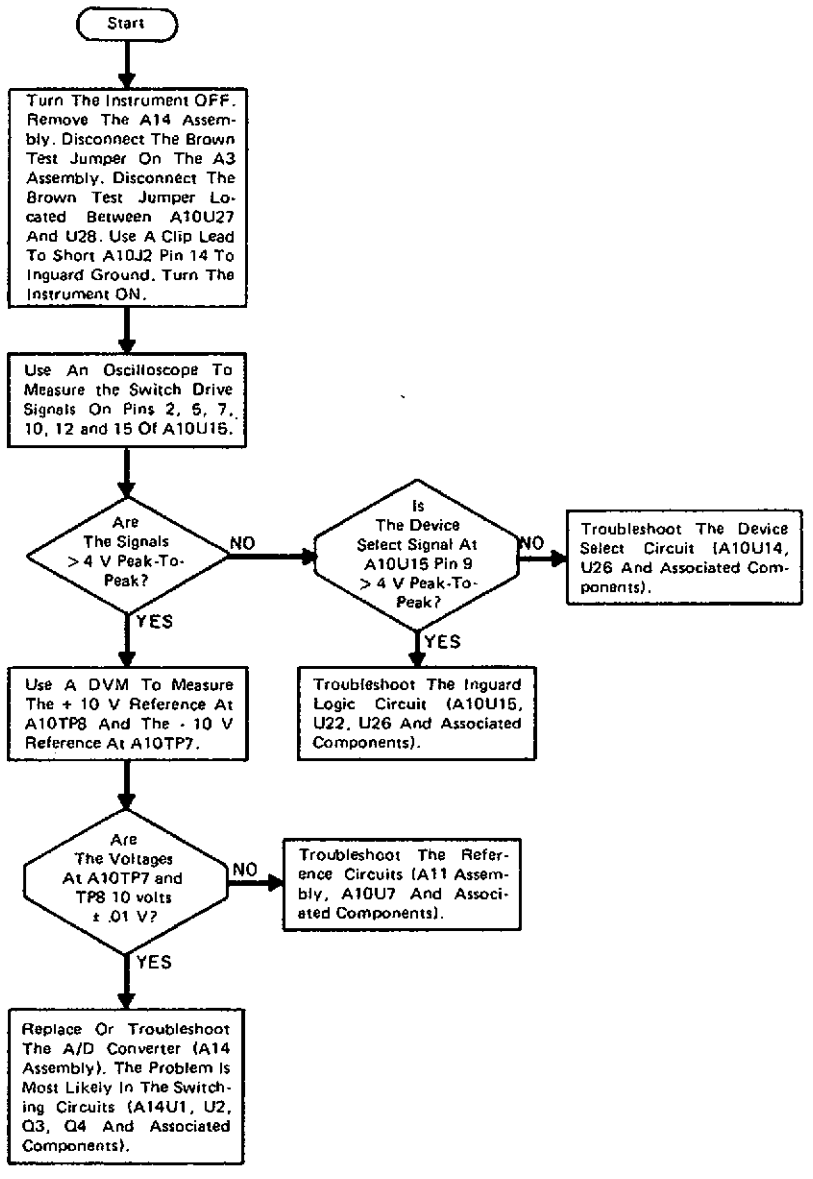

Figure 8-H-4. Inguard Troubleshooting Procedure Diagram, Auto-Cal Circuitry TEST 12.

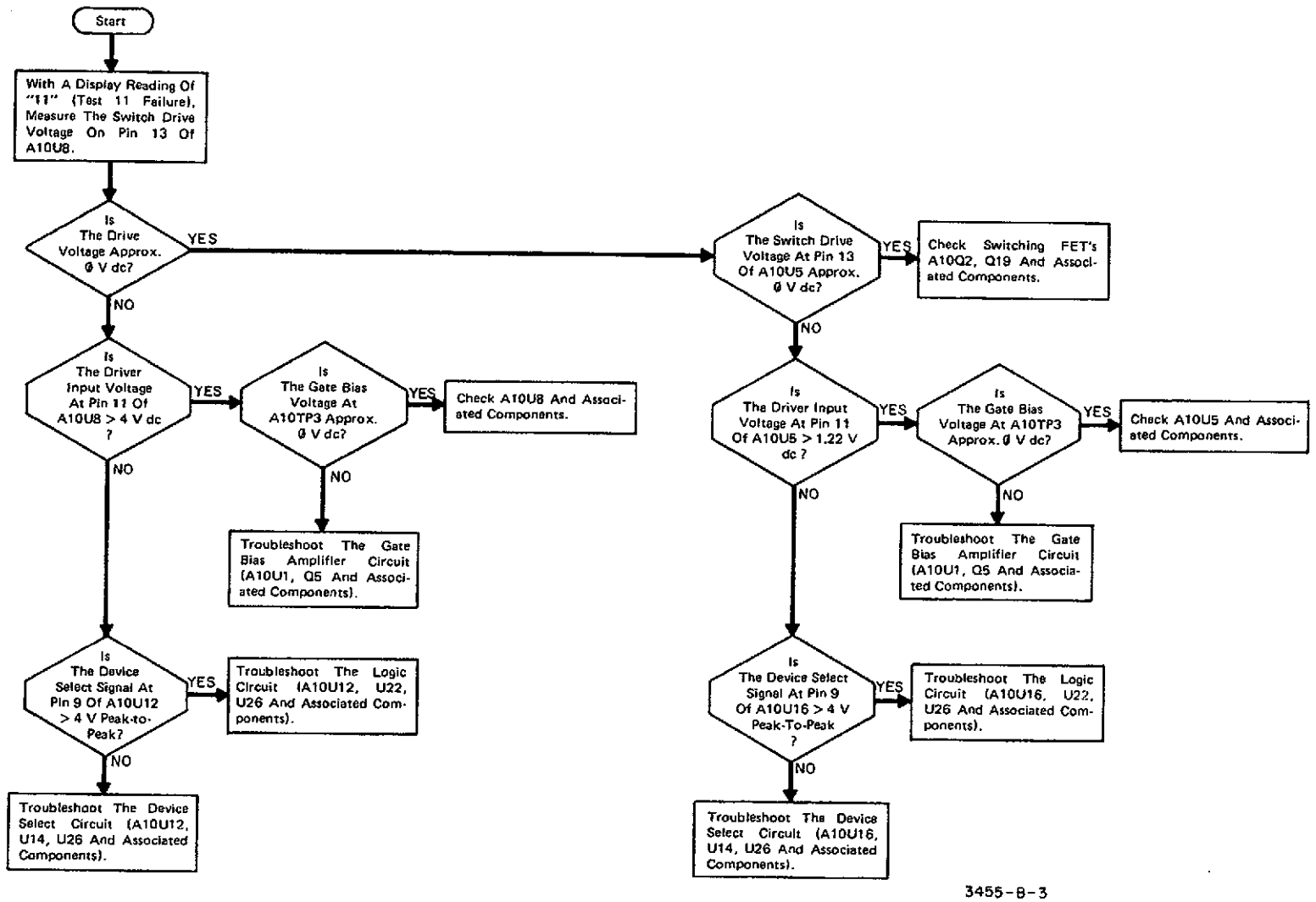

Figure 8-H-5. Inguard Troubleshooting Procedure Diagram, Auto-Cal Circuitry TEST 11.

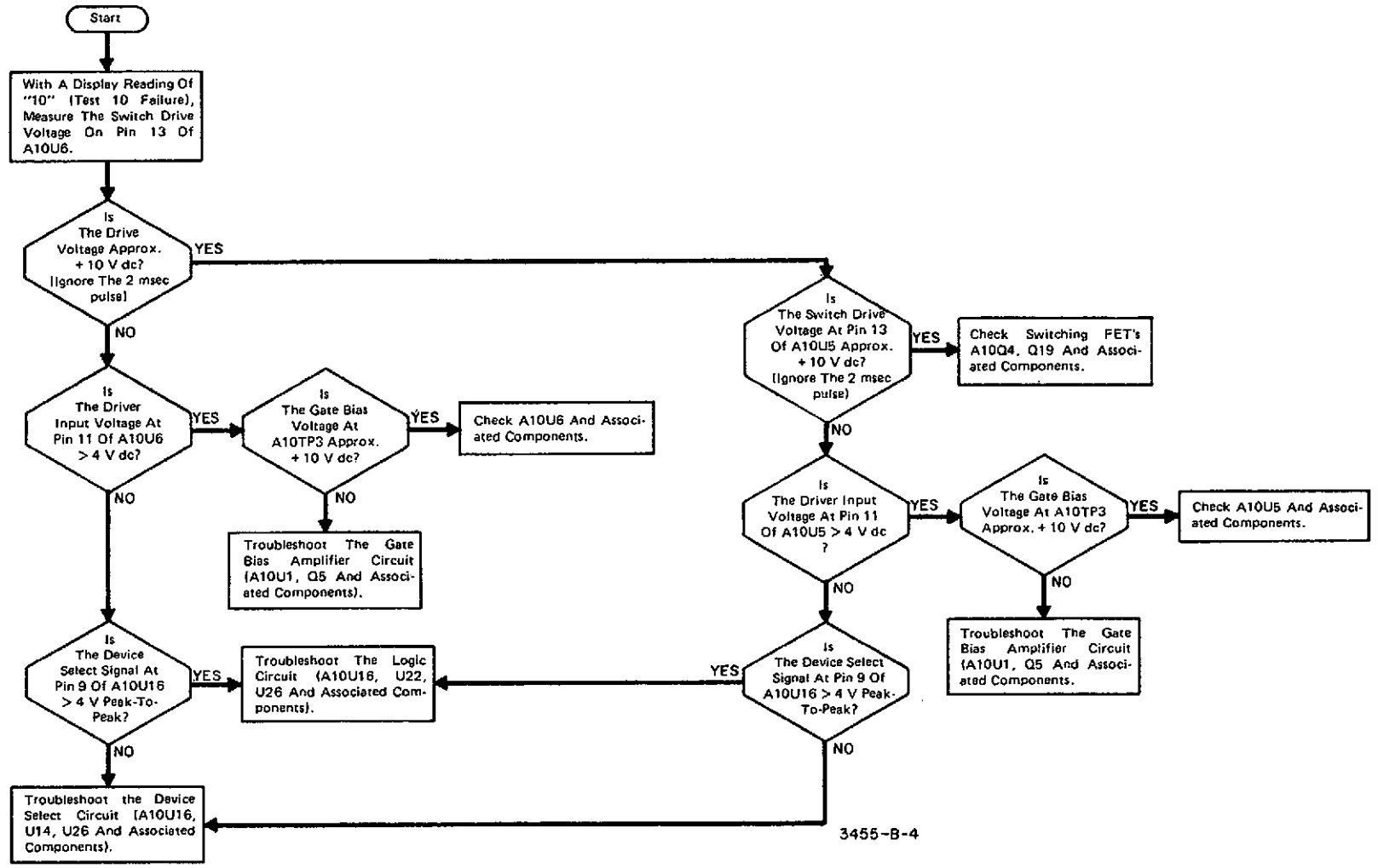

Figure 8-H-6. Inguard Troubleshooting Procedure Diagram, Auto-Cal Circuitry TEST 10.

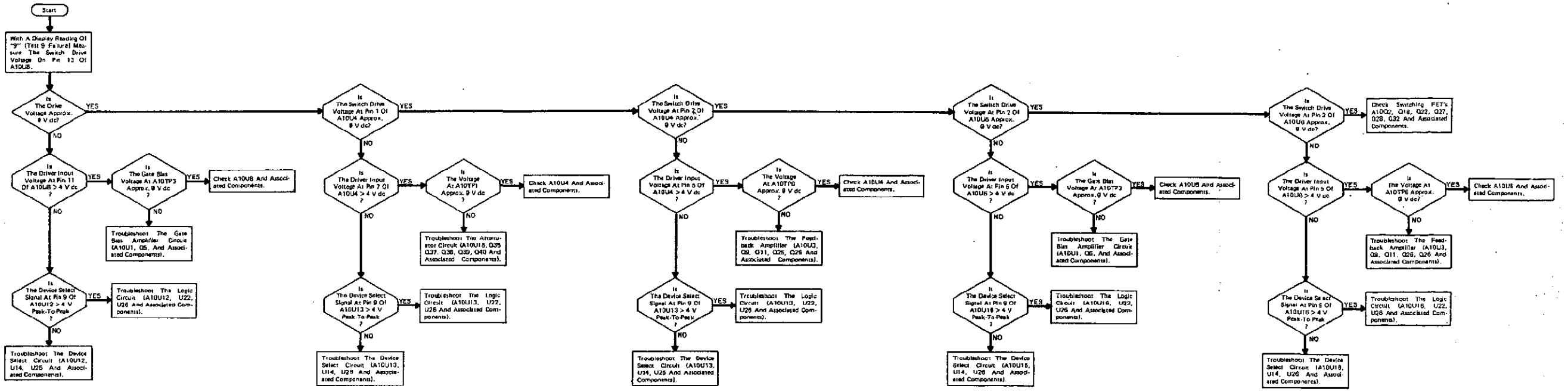

Figure 8-H-7. Inguard Troubleshooting Procedure Diagram, Auto-Cal Circuitry TEST 9.

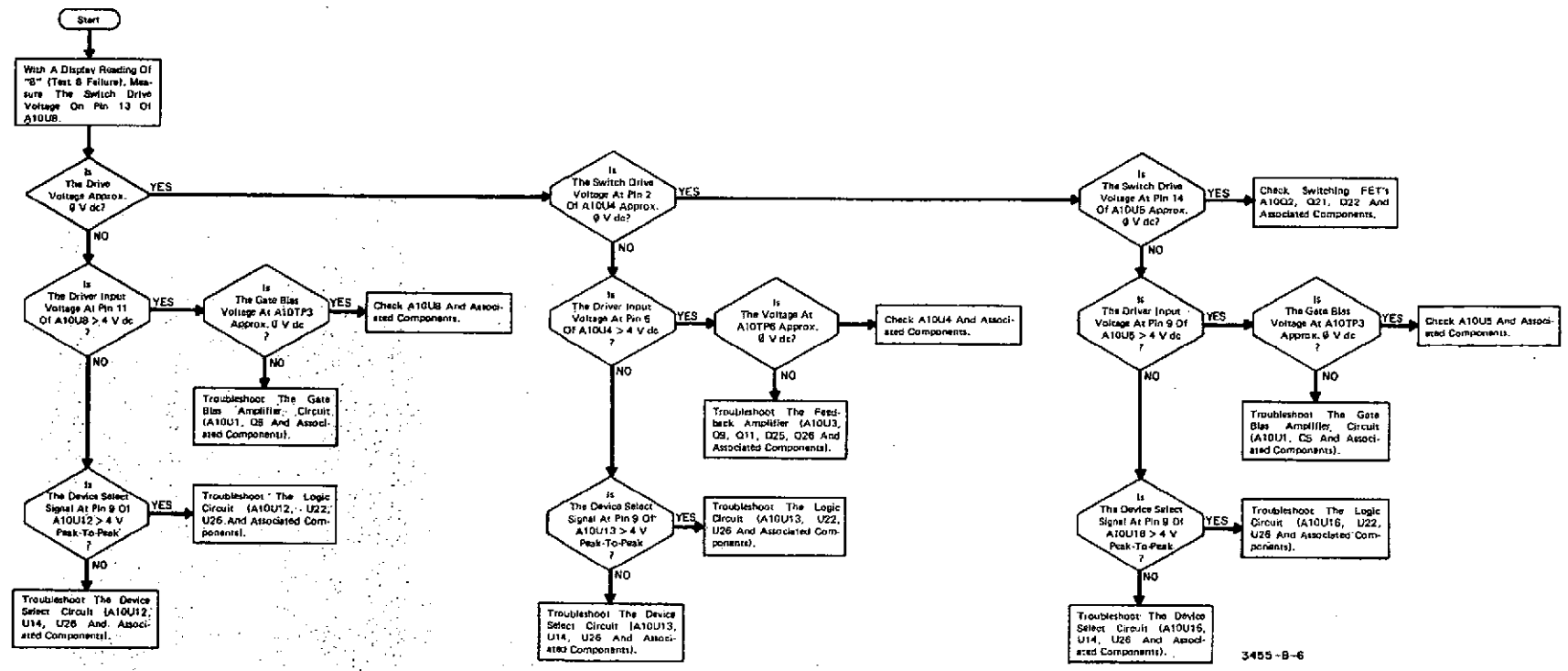

Figure 8-H-8. Inguard Troubleshooting Procedure Diagram, Auto-Cal Circuitry TEST 8.

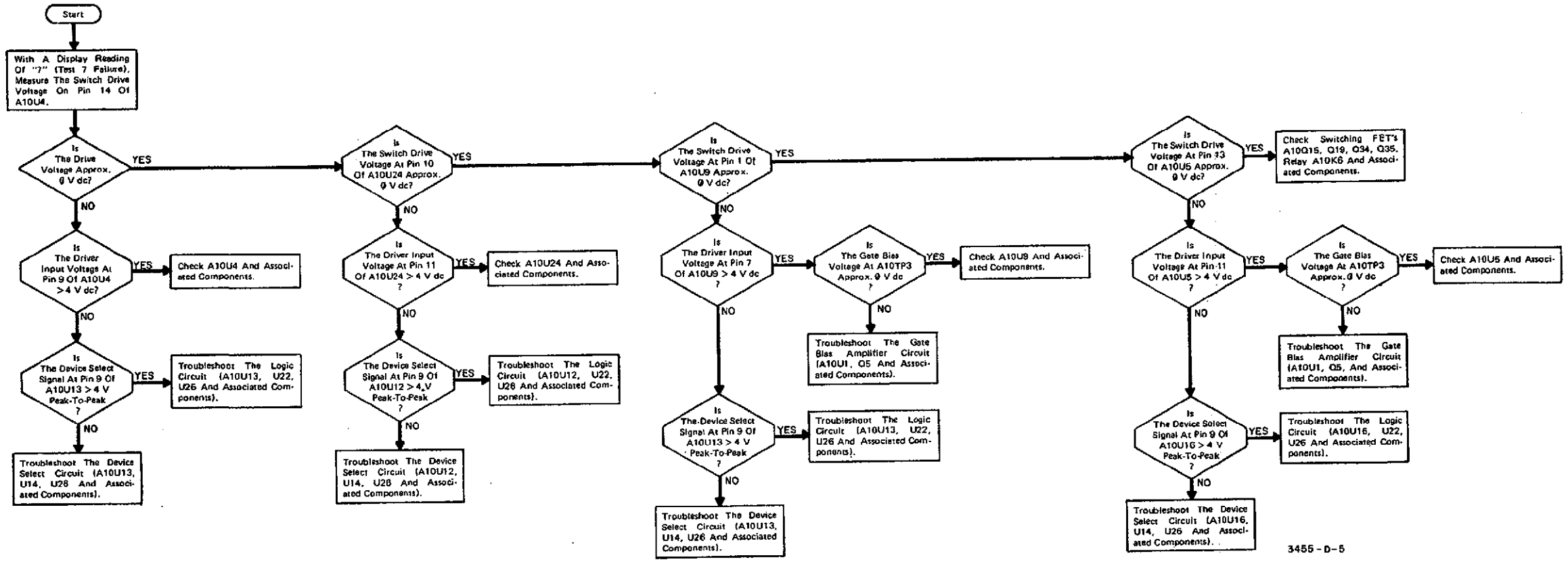

Figure 8-H-9. Inguard Troubleshooting Procedure Diagram, Auto-Cal Circuitry TEST 7.

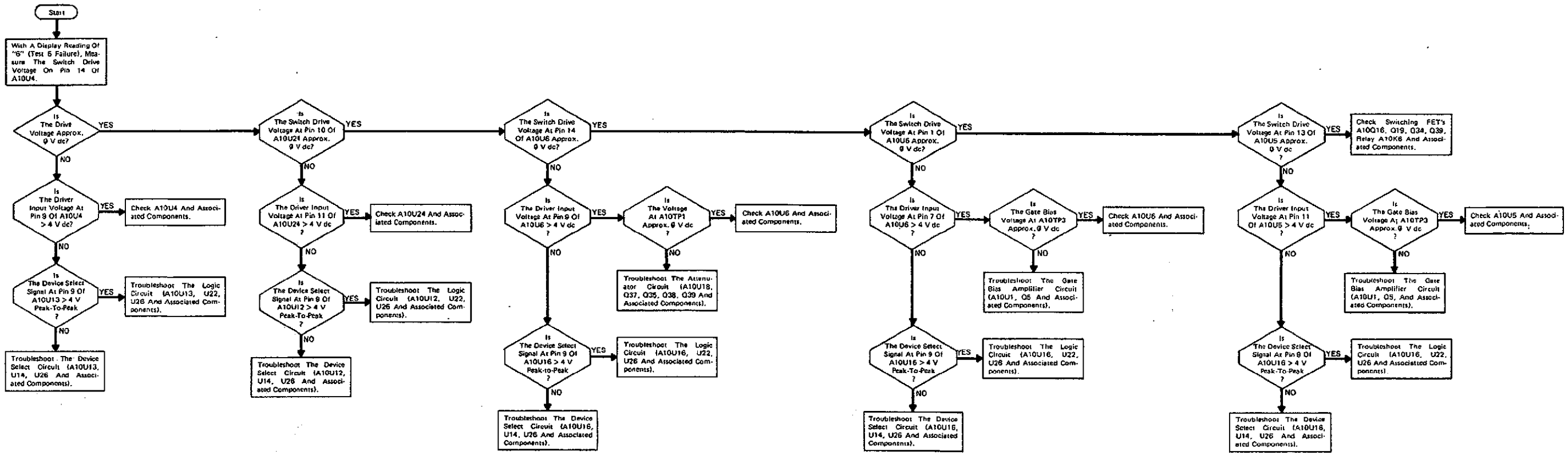

3455-D-7

Figure 8-H-10. Inguard Troubleshooting Procedure Diagram, Auto-Cal Circuitry TEST 6.

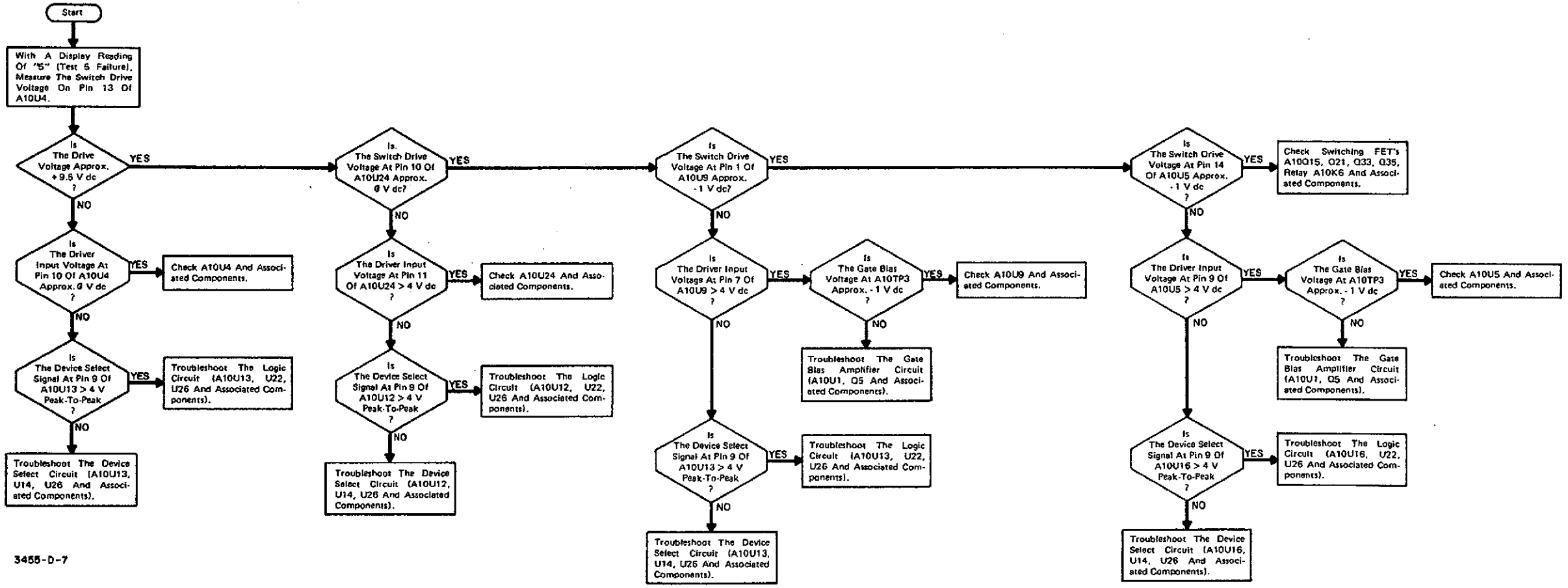

3455-D-7

Figure 8-H-11. Inguard Troubleshooting Procedure Diagram, Auto-Cal Circuitry TEST 5.

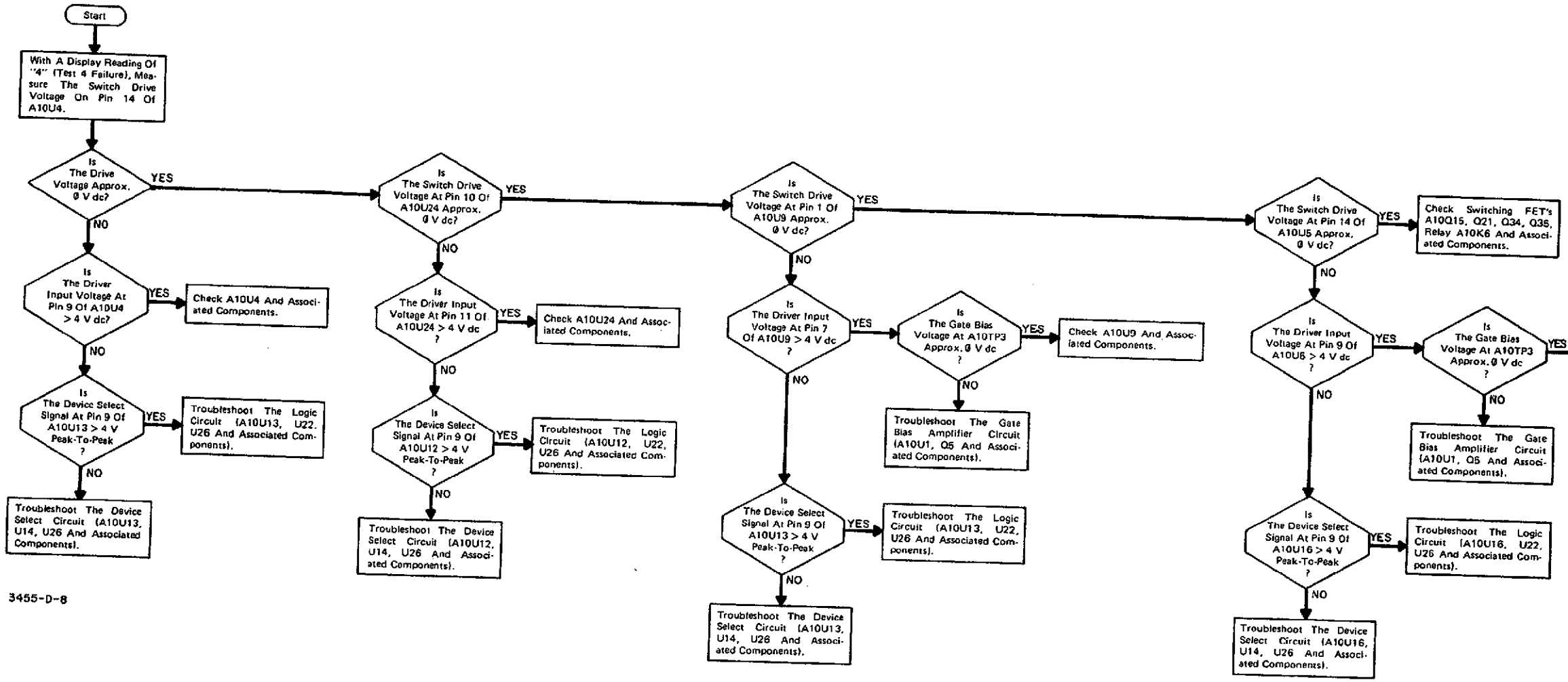

3455-D-8

Figure 8-H-12. Inguard Troubleshooting Procedure Diagram, Auto-Cal Circuitry TEST 4.

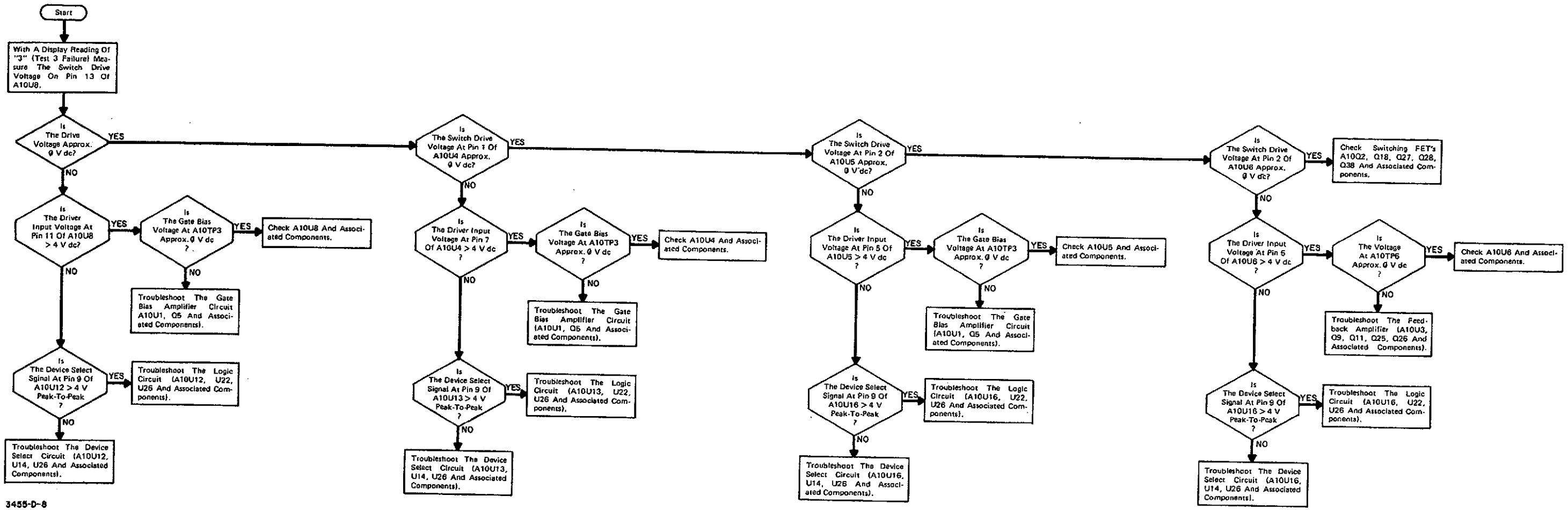

3455-D-8

Figure 8-H-13. Inguard Troubleshooting Procedure Diagram, Auto-Cal Circuitry TEST 3.

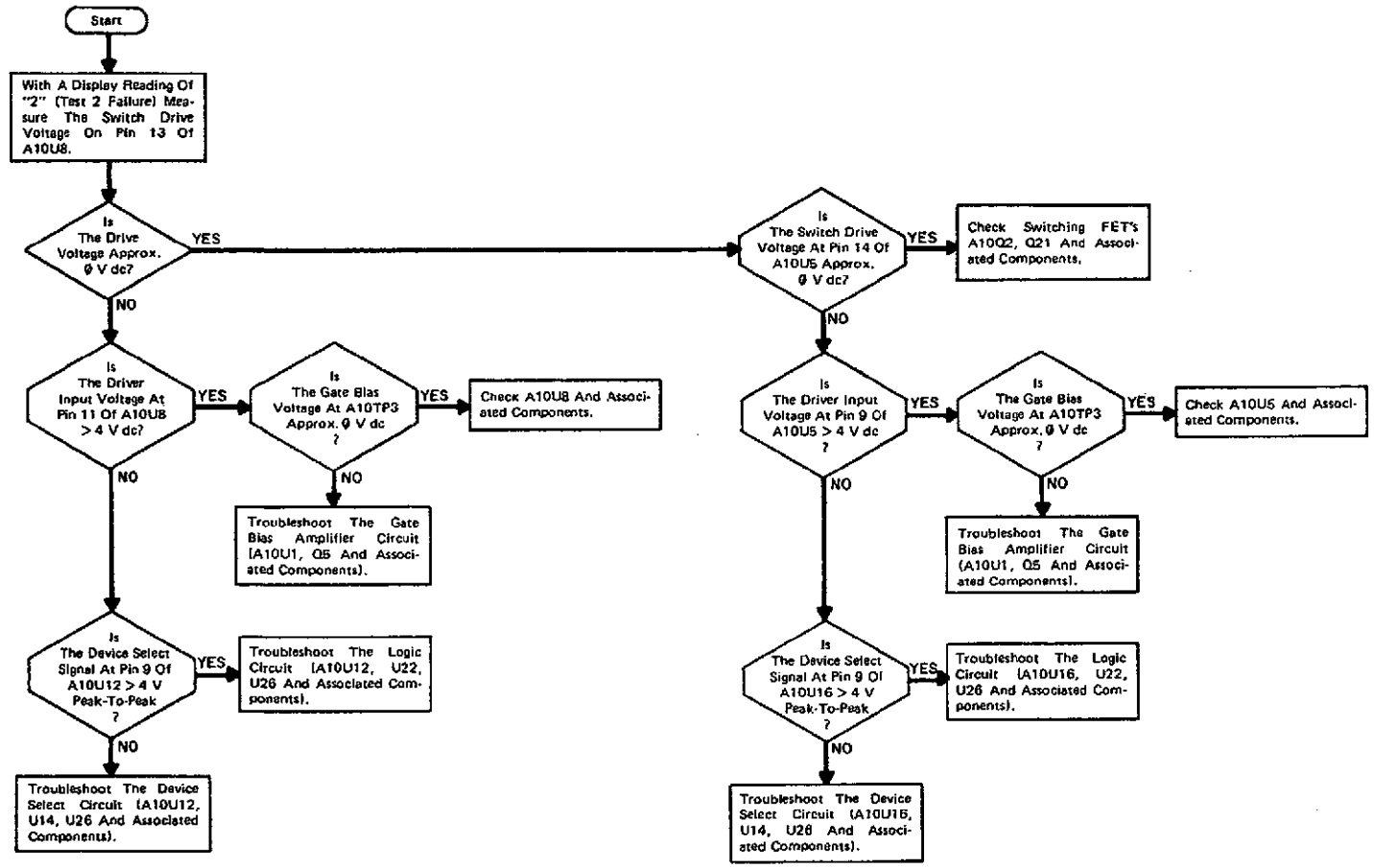

Figure 8-H-14. Inguard Troubleshooting Procedure Diagram, Auto-Cal Circuitry TEST 2.

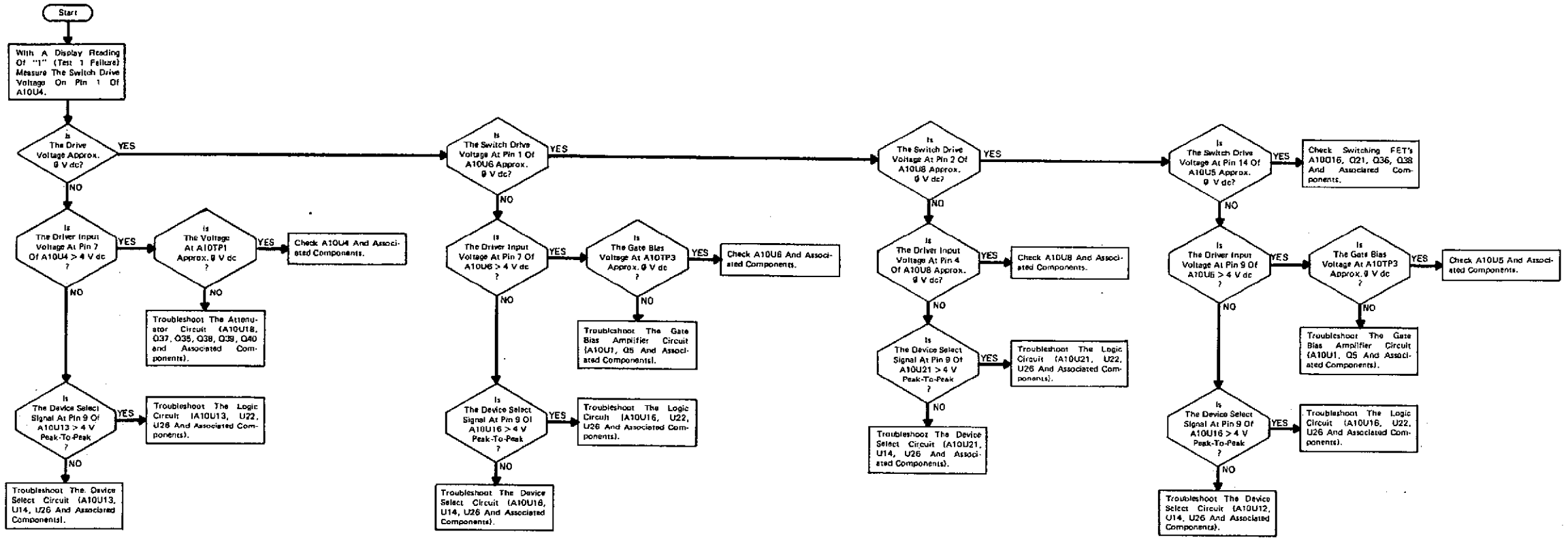

3455-D-10

Figure 8-H-15. Inguard Troubleshooting Procedure Diagram, Auto-Cal Circuitry TEST 1.

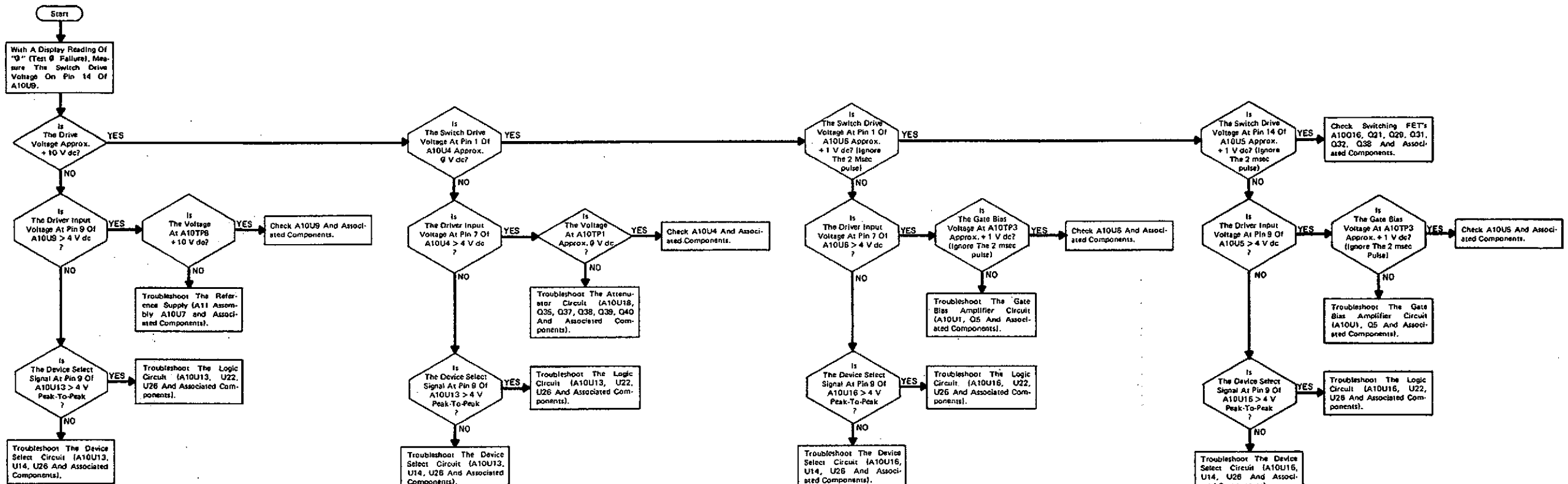

3455-D-IO

Figure 8-H-16. Inguard Troubleshooting Procedure Diagram, Auto-Cal Circuitry TEST 9.

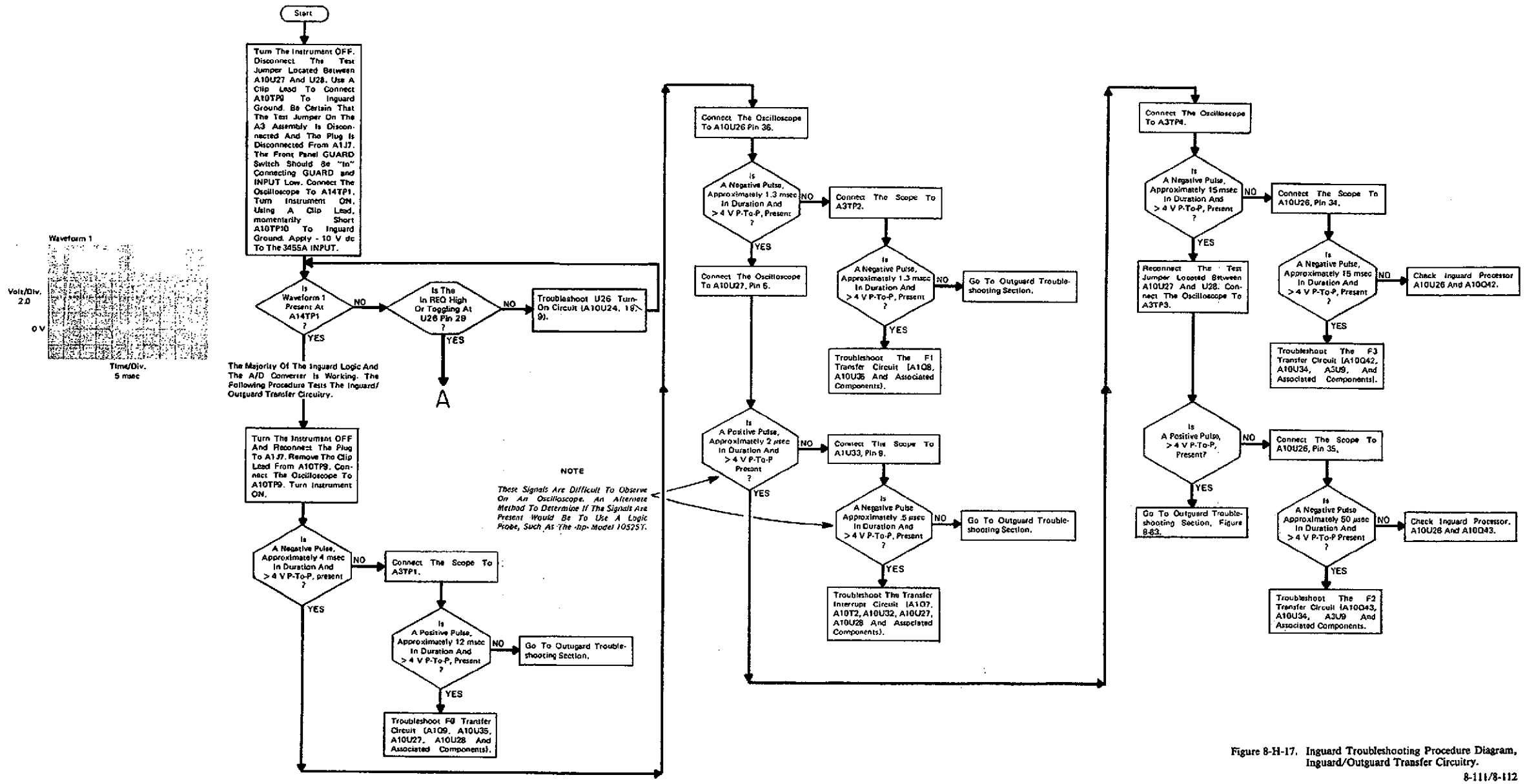

Figure 8-H-17. Inguard Troubleshooting Procedure Diagram, Inguard/Outguard Transfer Circuitry.

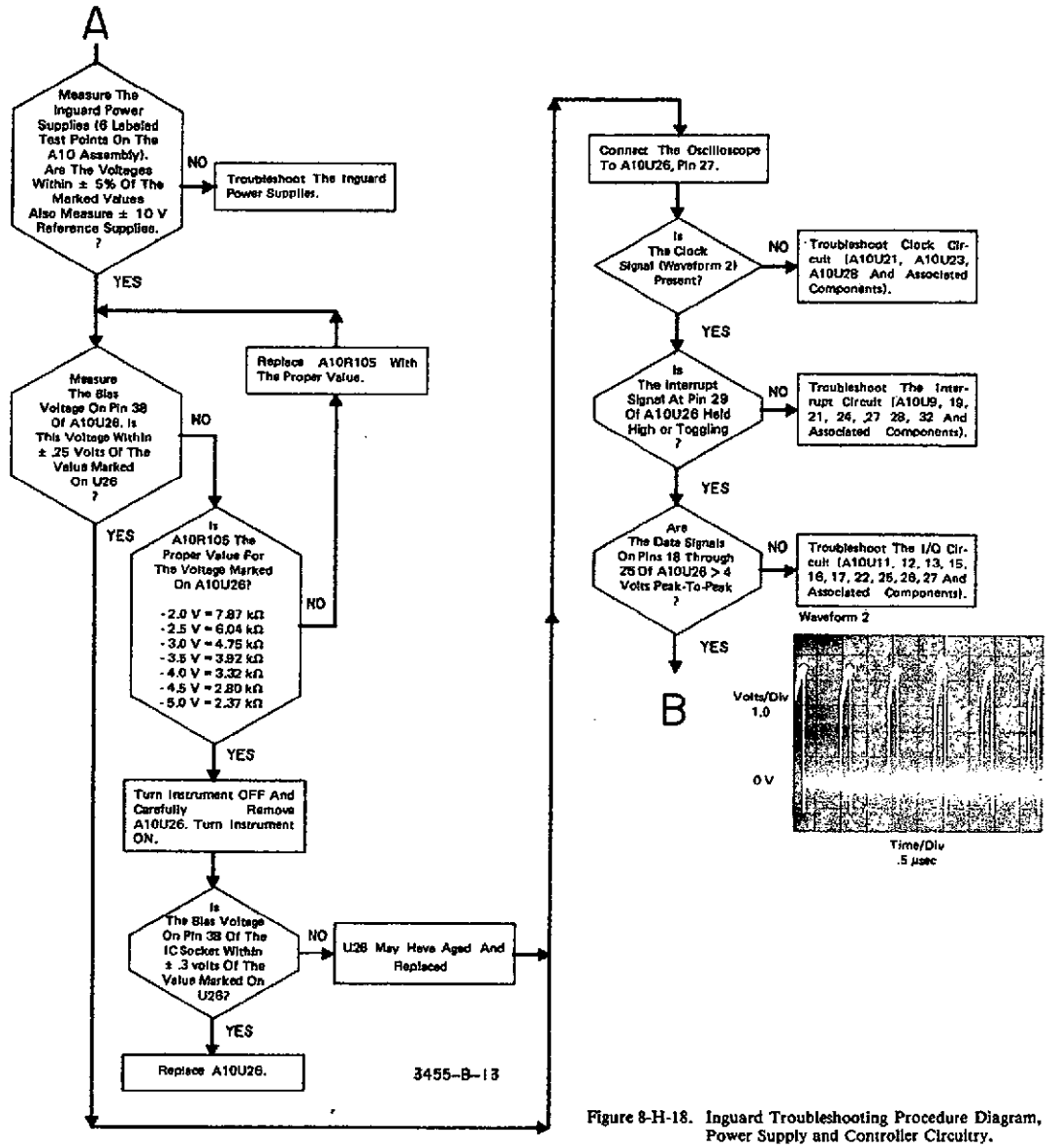

Figure 8-H-18. Inguard Troubleshooting Procedure Diagram, Power Supply and Controller Circuitry.

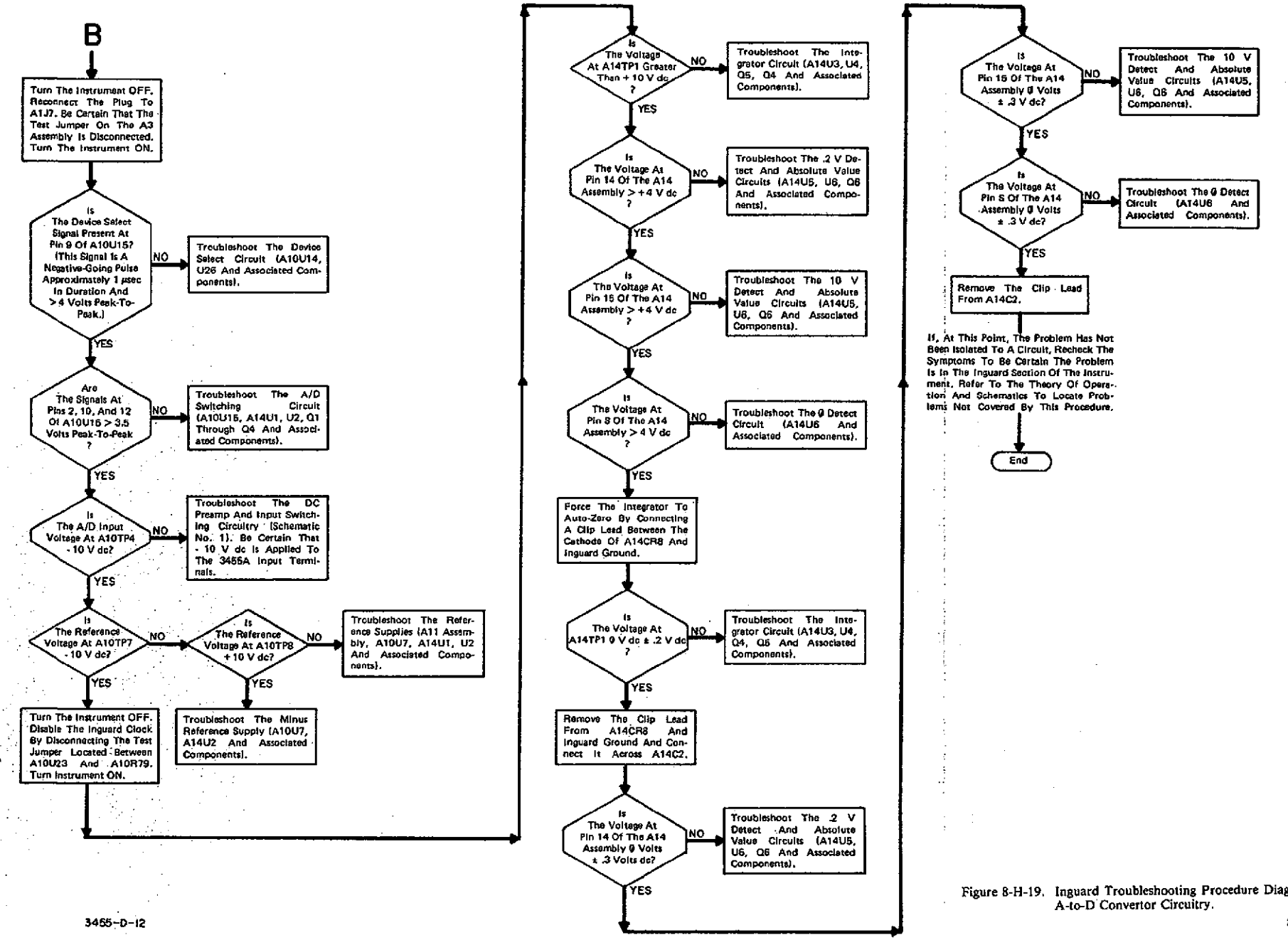

Figure 8-H-19. Inguard Troubleshooting Procedure Diagram, A-to-D Convertor Circuitry.

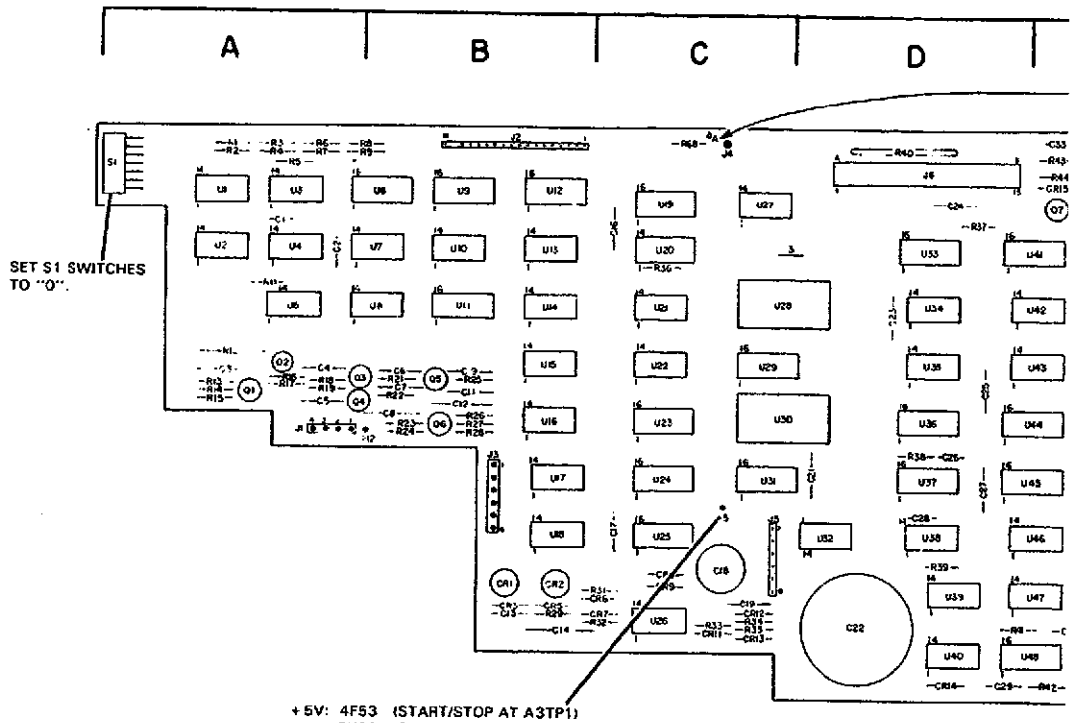

A1
03455-66501
Rev. D

A10. Component Locator Table.

Component	Col	Component	Col	Component	Col	Component	Col	Component
C1	B	CR1-2	B	J1	C-D	Q1-5	C	R1
2-3	C	3-5	D	2	E-F	6	D	2
4	D	6	E	3	A	7-9, 11	E	3-4
5-6	E	7-8	F	4	B-C	12	F	7-9, 11
7-9, 11	F	9, 11	B	5	E	13-16	C	12-19
12	B	12-13	D			17-18	C-D	21-27
13-15	C	14	E			19, 21-22	D	28-29, 31-37
16	D	15	F			23-29	E	38
17	A	16-17	B	JM1-2	F	31-32	F	39, 41-44
18-19	E	18-19, 21-22	C	3	D	33-36	B	45
21-22	A	23	F			37-39	A	46
23-25	B	24	B	K1-2	A	40-41	B	47
26-27	C	25-26	C	3	B	42-43	E	48
28-29, 31	D	27-28	A	4-5	A	44-45	A	49
32-34	E	29, 31	C	6	B	46	B	51-58
35-36	F	37-39	D	7	A-B			59, 61-62
37-39, 41-49	C	41-42	D	8	B			63
45	D	43-44	A	9	A-B			64-65
46	B	45-47	B					66-69, 71-72
47	C-D	48-49, 51-56	C	L1	A			73
48	D	57-58	A					74-78
49	E	59	B					79, 81
51	F	61-64	C					82-83
52-53	B	65-68	D					84
54-57	C	69	F					85
58-59, 61	D	71-72	D					86-89, 91-92
62-63, 65	E							93-96
66	F	E1	A					97-99
		E2 (Below K9)	A-B					101-102
								103
								104-105
								106-107, 111
								108-109

8-H-7. OUTGUARD TROUBLESHOOTING.

8-H-8. This section contains information and procedures to aid in troubleshooting the digital (outguard) portion of the 3455A.

8-H-9. A Signature Analyzer (-hp- Model 5004A) is required to perform the Outguard Troubleshooting procedures. If one is not available, it is suggested that the 3455A be returned to an -hp- Sales and Service Office for repair.

NOTE 1

The Signature Analyzer Controls Should Be Set As Follows For This Test.

LINE . . . . . .ON (IN)
START. . . . . ⌐ (IN)
STOP. . . . . ⌐ (OUT)
CLOCK. . . . . ⌐ (OUT)
HOLD . . . . . .OFF (OUT)
SELF TEST . . . .OFF (OUT)

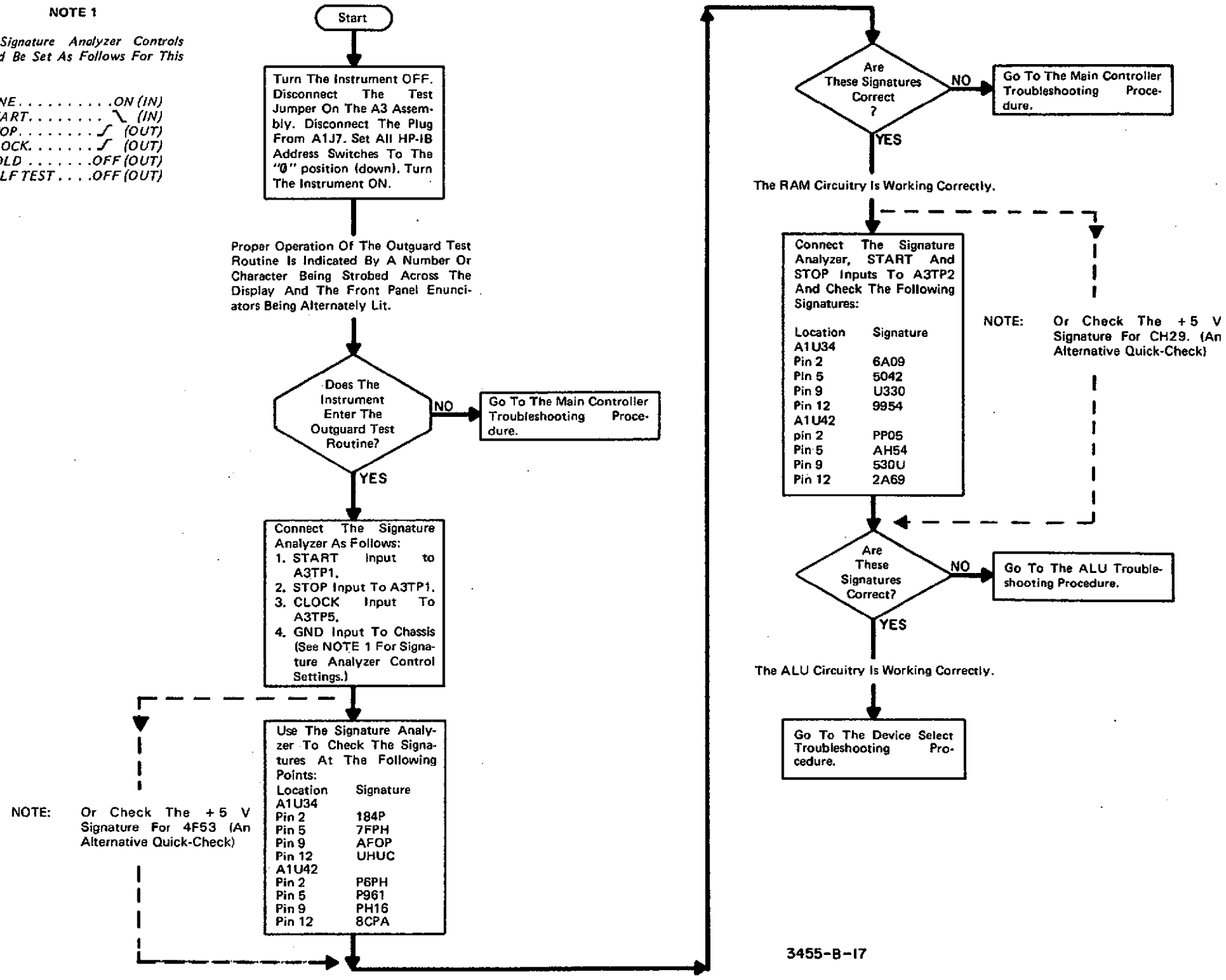

Figure 8-H-20. Preliminary Outguard Troubleshooting Procedure Diagram.

NOTE 1

The Signature Analyzer Controls Should Be Set As Follows For This Test:

LINE . . . . . ON (IN)
START. . . . . ⌐ (IN)
STOP. . . . . ⌐ (OUT)
CLOCK. . . . . ⌐ (OUT)
HOLD . . . . . OFF (OUT)
SELF TEST . . . . . OFF (OUT)

NOTE 2

The Following Is A List Of Components Which Are Connected To The Processor Input Data Bus.

Schematic 8	*Schematic 9*	*Schematic 10*
A1U5	*A1U1*	*A1U59*
A1U21	*A1U15*	*A1U60*
A1U22	*A1U16*	
A1U27	*A1U17*	
A1U34	*A1U18*	
A1U35	*A1S1*	
A1U42		
A1U43		
A1R40		

WAVEFORM 1

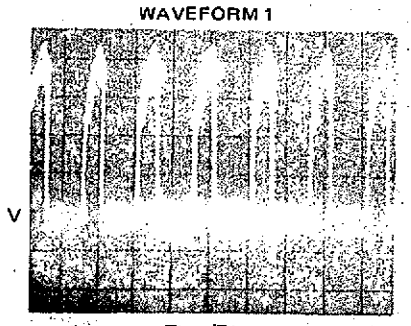

Time/Div.
.5 μsec

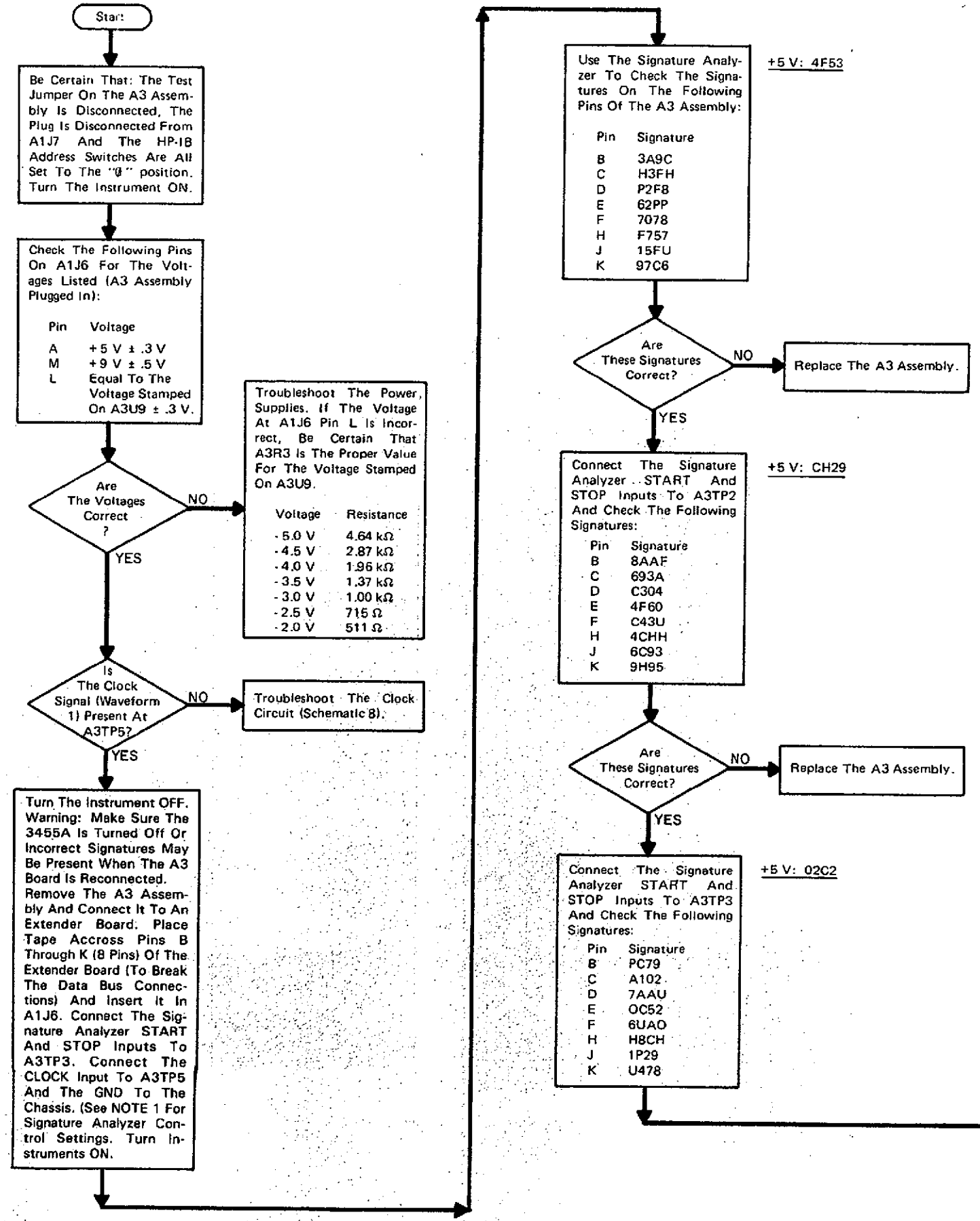

3455-C-18

Figure 8-H-21. Outguard Trout Main Controller

NOTE 1

The Signature Analyzer Controls Should Be Set As Follows For This Test:

LINE . . . . . .ON (IN)
START. . . . . ⌝ (IN)
STOP. . . . . ⌟ (OUT)
CLOCK. . . . . ⌟ (OUT)
HOLD . . . . . .OFF (OUT)
SELF TEST . . . . .OFF (OUT)

NOTE 2

The Following Is A List Of Components Which Are Connected To The Processor Input Data Bus.

Schematic 8	*Schematic 9*	*Schematic 10*
A1U5	*A1U1*	*A1U59*
A1U21	*A1U15*	*A1U60*
A1U22	*A1U16*	
A1U27	*A1U17*	
A1U34	*A1U18*	
A1U35	*A1S1*	
A1U42		
A1U43		
A1R40		

WAVEFORM 1

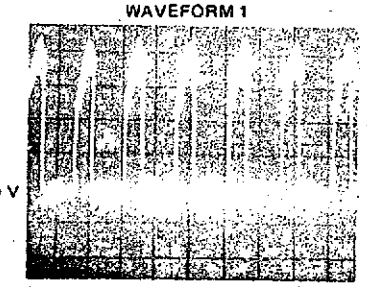

Start

Be Certain That: The Test Jumper On The A3 Assembly Is Disconnected, The Plug Is Disconnected From A1J7 And The HP-IB Address Switches Are All Set To The "0" position. Turn The Instrument ON.

Check The Following Pins On A1J6 For The Voltages Listed (A3 Assembly Plugged In):

Pin	Voltage
A	+5 V ± .3 V
M	+9 V ± .5 V
L	Equal To The Voltage Stamped On A3U9 ± .3 V.

Are The Voltages Correct ? — NO → Troubleshoot The Power Supplies. If The Voltage At A1J6 Pin L Is Incorrect, Be Certain That A3R3 Is The Proper Value For The Voltage Stamped On A3U9.

Voltage	Resistance
-5.0 V	4.64 kΩ
-4.5 V	2.87 kΩ
-4.0 V	1.96 kΩ
-3.5 V	1.37 kΩ
-3.0 V	1.00 kΩ
-2.5 V	715 Ω
-2.0 V	511 Ω

YES

Is The Clock Signal (Waveform 1) Present At A3TP5? — NO → Troubleshoot The Clock Circuit (Schematic 8).

YES

Turn The Instrument OFF. Warning: Make Sure The 3455A Is Turned Off Or Incorrect Signatures May Be Present When The A3 Board Is Reconnected. Remove The A3 Assembly And Connect It To An Extender Board. Place Tape Accross Pins B Through K (8 Pins) Of The Extender Board (To Break The Data Bus Connections) And Insert It In A1J6. Connect The Signature Analyzer START And STOP Inputs To A3TP3. Connect The CLOCK Input To A3TP5 And The GND To The Chassis. (See NOTE 1 For Signature Analyzer Control Settings. Turn Instruments ON.

Use The Signature Analyzer To Check The Signatures On The Following Pins Of The A3 Assembly: — +5 V: 4F53

Pin	Signature
B	3A9C
C	H3FH
D	P2F8
E	62PP
F	7078
H	F757
J	15FU
K	97C6

Are These Signatures Correct? — NO → Replace The A3 Assembly.

YES

Connect The Signature Analyzer START And STOP Inputs To A3TP2 And Check The Following Signatures: — +5 V: CH29

Pin	Signature
B	8AAF
C	693A
D	C304
E	4F60
F	C43U
H	4CHH
J	6C93
K	9H95

Are These Signatures Correct? — NO → Replace The A3 Assembly.

YES

Connect The Signature Analyzer START And STOP Inputs To A3TP3 And Check The Following Signatures: — +5 V: 02C2

Pin	Signature
B	PC79
C	A102
D	7AAU
E	OC52
F	6UAO
H	H8CH
J	1P29
K	U478

Are These Signatures Correct? — NO → Replace The A3 Assembly.

YES

Connect The Signature Analyzer START And Stop Inputs To A3TP4 And Check The Following Signatures: — +5 V: 79FU

Pin	Signature
B	CHC4
C	6COP
D	A43P
E	129C
F	OC93
H	CP65
J	F517
K	6P03

Are These Signatures Correct ? — NO → Replace The A3 Assembly.

YES

Connect The Signature Analyzer START And STOP Inputs To A3TP3 And Check The Following Signatures: — +5 V: 02C2

Pin	Signature
4	U5P6
7	23F9
9	2A6F
10	3A9F
11	6242

Are These Signatures Correct ? — NO → Replace The A3 Assembly.

YES

Use An Oscilloscope To Measure The Amplitude Of The Waveforms At A3TP1, TP2, TP3, And TP4.

Are All Waveforms > 4 V Peak-To-Peak ? — NO → Replace The A3 Assembly.

YES

The Main Controller Test Routine Is Operating Properly.

Use An Oscilloscope To Measure The Amplitude Of The Signals On The Processor Data Bus Lines At The Following Points:

A1U34 Pins 5, 9, 12
A1U42 Pins 2, 5, 9, 12

Are These Signals > 4 V Peak-To-Peak ? — NO → Refer To Schematic 8 To Determine Which Data Bus Line (D0 Through D7) Is Being Held. Troubleshoot The Components Which Are Connected To This Line. (See Note 2.)

In Most Cases, A High Resolution Voltmeter (1 µV Resolution) May Be Used To Determine The Bad Component. If The Data Line Is Being Held Low, The Component With The Lowest Voltage Reading Will Generally Be The Faulty Part. If The Line Is Being Held High, The Bad Part Will Normally Have The Highest Voltage Reading.

When Troubleshooting The Processor Data Bus, The A3 Assembly Should Be Removed From The Instrument. (Be Sure To Remove The Tape From The Extender Board.)

YES

Is The Voltage At Pin 2 Of A1U34 > 4 V dc ? — NO → (to Are These Signals)

YES

The Processor Input Data Bus Is Operating Properly.

Turn The Instrument OFF. Remove The A3 Assembly From The Extender Board And Replace It In The Instrument. (Be Sure To Remove The Tape From The Extender Board.) Turn The Instrument ON.

Go To The RAM Troubleshooting Procedure.

3455-C-18

Figure 8-H-21. Outguard Troubleshooting Procedure Diagram, Main Controller Circuitry.

The following signatures are for the outguard RAM circuits. The signatures are taken with the start/stop inputs of the signature analyzer connected to A3TP1.

NOTE

**These signatures apply when U44 and U45 are removed from their sockets.*

**To obtain this signature, a 10 K resistor must be connected between the 5 volt TP and the probe tip of the signature analyzer.*

To check for proper logic tracer connections verify signature of +5 test point is 4F53. The signatures in this section take one or two readings to stabilize.

+5 V: 4F53

	Pin	Signature
U34	1	7622
	2	184P
	3	184P
	4	7622
	5	7FPH
	6	7FPH
	7	0000
	8	AF0P
	9	AF0P
	10	7622
	11	UHUC
	12	UHUC
	13	7622
	14	4F53
U36	1	3A71
	2	184P
	3	184P
	4	3A71
	5	7FPH
	6	7FPH
	7	0000
	8	AF0P
	9	AF0P
	10	3A71
	11	UHUC
	12	UHUC
	13	3A71
	14	4F53
U36	1	4F53
	2	F281
	3	AF0P*7078*,**
	4	UHUC*F757*,**
	5	7FPH*15FU*,**
	6	184P*97C6*,**
	7	183F
	8	0000
	9	1PP5
	10	183F
	11	671F
	12	FF11
	13	1UFP
	14	143A
	15	68P0
	16	4F53

	Pin	Signature
U37	1	4F53
	2	F281
	3	P6PH*3A9C*,**
	4	P981*H3FH*,**
	5	8CPA*P2F8*,**
	6	PH16*62PP*,**
	7	4F53
	8	0000
	9	1PP5
	10	4F53
	11	93AF
	12	U8FF
	13	0HAH
	14	4AC4
	15	183F
	16	4F53
U38	5	1PP5
	8	1PP5
	11	F281
	12	1PP5
	13	9037
U39	8	HF64
	9	9037
U42	1	7622
	2	P6PH
	3	P6PH
	4	7622
	5	P981
	6	P981
	7	0000
	8	PH16
	9	PH16
	10	7622
	11	8CPA
	12	8CPA
	13	7622
	14	4F53
U43	1	3A71
	2	P6PH
	3	P6PH
	4	3A71
	5	P981
	6	P981
	7	0000
	8	PH16
	9	PH16
	10	3A71
	11	8CPA
	12	8CPA
	13	3A71
	14	4F53

	Pin	Signature
U44	1	93AF
	2	U8FF
	3	0HAH
	4	4AC4
	5	1UFP
	6	FF11
	7	671F
	8	0000
	9	AF0P*7078*,**
	10	184P*97C6*,**
	11	UHUC*F757*,**
	12	7FPH*15FU*,**
	13	9037
	14	7622
	15	143A
	16	4F53
U45	1	93AF
	2	U8FF
	3	0HAH
	4	4AC4
	5	1UFP
	6	FF11
	7	671F
	8	0000
	9	PH16*62PP*,**
	10	8CPA*P2F8*,**
	11	P981*H3FH*,**
	12	P6PH*3A9C*,**
	13	9037
	14	7622
	15	143A
	16	4F53
U46	1	HF64
	2	7622
	3	3A71

NOTE 1

The Signature Analyzer Controls Should Be Set As Follows For This Test:

LINE . . . . . .ON (IN)
START. . . . . _ (IN)
STOP. . . . . ‾ (OUT)
CLOCK. . . . . ‾ (OUT)
HOLD . . . . . .OFF (OUT)
SELF TEST . . . . . .OFF (OUT)

NOTE 2

The Following Is A List Of Components Which Are Connected To The Output Data Bus.

Schematic 8	*Schematic 9*	*Schematic 10*
A1U23	*A1U11*	*A1U51*
A1U24	*A1U18*	*A1U54*
A1U25	*A1U19*	*A1U53*
A1U29	*A1U20*	*A1U64*
A1U31	*A1U26*	*A1U65*
A1U34		*A1U56*
A1U35		*A1U57*
A1U36		*A1U58*
A1U37		*A1U59*
A1U42		*A1U70*
A1U43		

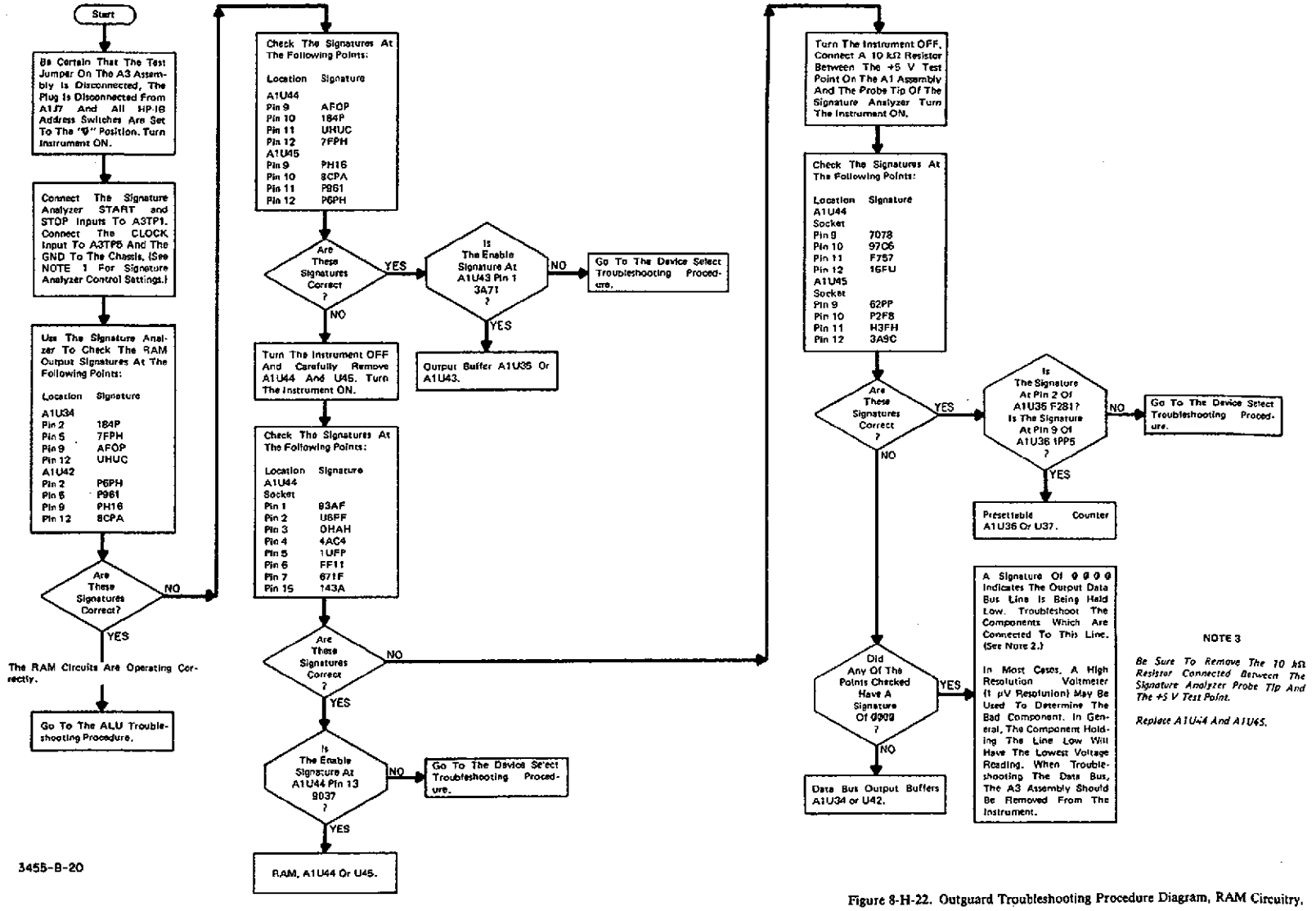

NOTE 3

Be Sure To Remove The 10 kΩ Resistor Connected Between The Signature Analyzer Probe Tip And The +5 V Test Point.

Replace A1U44 And A1U45.

3455-B-20

Figure 8-H-22. Outguard Troubleshooting Procedure Diagram, RAM Circuitry.

The following signatures are for the subtraction ALU circuits. The signatures are taken with the start/stop inputs of the signature analyzer connected to A3TP2.

NOTE

The double dots signature, # 10 K resistor must be connected between the 5 volt TP and the anode tip of the signature analyzer.

To check for proper signature analyzer connections verify signature of +5 V test point is C1C29.

U16	4	CP#1					
	5	CP#2					
	6	UCA4					
U21	1	EA67					
	2	8CPU					
	3	U#01*					
	4	EA67					
	5	8CPU					
	6	1CA7					
	7	U#01*					
	8	FA43*					
	9	3U#1*					
U22	1	EA67					
	2	9446					
	3	9U2A					
	4	8H87					
	5	CPXH					
	6	AH5#					
	7	5C04					
	8	7A69					
	9	P0F9					
	10	6D8U					
	11	6A67					
	12	P0F9					
	13	7H#1*					
	14	H46U					
	15	0129					
	16	0P0F					
	17	1UP6					
	18	9H4U					
	19	3H92					
	20	9P30					
	21	8SH2					
	22	23H1					
	23	1HHA					
	24	01H8					

U26	1	CH29					
	2	A81P					
	3	U#01*					
	4	17A6*					
	5	FA43*					
	6	1P#A					
	7	9H#2					
	8	0000					
	9	2MH1*					
	10	17A6*					
	11	1H60					
	12	0000					
	13	2131					
	14	234C*					
	15	F0D3					
	16	CPP2					
	17	5C8H					
	18	3P55					
	19	3H93					
	20	0000					
U28	1	6406					
	2	HCH9					
	3	3U52					
	4	9U2A					
	5	1UP4					
	6	1HP7					
	7	5673					
	8	0P6F					
	9	0BU7					
	10	7782					
	11	3U52					
	12	9U2A					
	13	HCH9					
	14	6A29					
	15	A71U4					
	16	98SH					

U25	1	A81P					
	2	6406					
	3	5UEF					
	4	0000					
	5	5C0F					
	6	1SU1					
	7	H4UF					
	8	5C0F					
	9	3H5E					
	10	CPXH					
	11	1SU1					
	12	0000					
	13	2131					
	14	3H5E					
	15	0129					
	16	F9#U					
	17	6D8U					
	18	0000					
	19	P0F9					
	20	7H#1*					
	21	0000					
	22	1H60					
	23	0P6F					
	24	CH29					

U30	1	A81P					
	2	6406					
	3	5UEF					
	4	0000					
	5	5C0F					
	6	1SU1					
	7	H4UF					
	8	5C0F					
	9	3H5E					
	10	CPXH					
	11	1SU1					
	12	0000					
	13	2131					
	14	3H5E					
	15	0129					
	16	F9#U					
	17	6D8U					
	18	0000					
	19	P0F9					
	20	7H#1*					
	21	0000					
	22	1H60					
	23	0P6F					
	24	CH29					

U29	1	CH29					
	2	A81P					
	3	U#01*					
	4	23#1*					
	5	8CPU					
	6	F#8S					
	7	9P30					
	8	H0Y4					
	9	2MH1					
	10	0000					
	11	1CA7					
	12	1CA7					
	13	1CH29					
	14	CH29*					
	15	CH29*					
	16	CH29					

U31	1	6467					
	2	8CPU					
	3	U#01*					
	4	6467					
	5	8CPU					
	6	1CA7					
	7	U#01*					
	8	FA43*					
	9	1P#A					
	10	0000					
	11	1CA7					
	12	1CA7					
	13	CH29					
	14	CH29*					
	15	CH29*					
	16	CH29					

U27	1	CH29					
	2	A81P					
	3	U#01*					
	4	17A6*					
	5	FA43*					
	6	1P#A					
	7	9H#2					
	8	0000					
	9	2MH1*					
	10	17A6*					
	11	1H60					
	12	0000					
	13	2131					
	14	234C*					
	15	F0D3					
	16	CPP2					
	17	5C8H					
	18	3P55					
	19	3H93					
	20	0000					
U24	1	6406					
	2	HCH9					
	3	3U52					
	4	9U2A					
	5	1UP4					
	6	1HP7					
	7	5673					
	8	0P6F					
	9	0BU7					
	10	7782					
	11	3U52					
	12	9U2A					
	13	HCH9					
	14	6A29					
	15	A71U4					
	16	98SH					

U23	1	CH29					
	2	0BU7					
	3	3H92					
	4	9U2A					
	5	1UP4					
	6	1HP7					
	7	5673					
	8	0P6F					
	9	0BU7					
	10	7782					
	11	3U52					
	12	9U2A					
	13	HCH9					
	14	6A29					
	15	A71U4					
	16	98SH					

U30	1	CH29					
	2	6406					
	3	5UEF					
	4	0000					
	5	5C0F					
	6	1SU1					
	7	H4UF					
	8	5C0F					
	9	3H5E					
	10	CPXH					
	11	1SU1					
	12	0000					
	13	2131					
	14	3H5E					
	15	0129					
	16	F9#U					
	17	6D8U					
	18	0000					
	19	P0F9					
	20	7H#1*					
	21	0000					
	22	1H60					
	23	0P6F					
	24	CH29					

U29	1	CH29					
	2	A81P					
	3	U#01*					
	4	23#1*					
	5	8CPU					
	6	F#8S					
	7	9P30					
	8	H0Y4					
	9	2MH1					
	10	0000					
	11	1CA7					
	12	1CA7					
	13	1CH29					
	14	CH29*					
	15	CH29*					
	16	CH29					

U31	1	6467					
	2	8CPU					
	3	U#01*					
	4	6467					
	5	8CPU					
	6	1CA7					
	7	U#01*					
	8	FA43*					
	9	1P#A					
	10	0000					
	11	1CA7					
	12	1CA7					
	13	CH29					
	14	CH29*					
	15	CH29*					
	16	CH29					

U27	1	CH29					
	2	A81P					
	3	U#01*					
	4	17A6*					
	5	FA43*					
	6	1P#A					
	7	9H#2					
	8	0000					
	9	2MH1*					
	10	17A6*					
	11	1H60					
	12	0000					
	13	2131					
	14	234C*					
	15	F0D3					
	16	CPP2					
	17	5C8H					
	18	3P55					
	19	3H93					
	20	0000					
U24	1	6406					
	2	HCH9					
	3	3U52					
	4	9U2A					
	5	1UP4					
	6	1HP7					
	7	5673					
	8	0P6F					
	9	0BU7					
	10	7782					
	11	3U52					
	12	9U2A					
	13	HCH9					
	14	6A29					
	15	A71U4					
	16	98SH					

U23	1	CH29					
	2	0BU7					
	3	3H92					
	4	9U2A					
	5	1UP4					
	6	1HP7					
	7	5673					
	8	0P6F					
	9	0BU7					
	10	7782					
	11	3U52					
	12	9U2A					
	13	HCH9					
	14	6A29					
	15	A71U4					
	16	98SH					

NOTE 1

The Signature Analyzer Should Be Set As Follows For This Test.

```
LINE . . . . . ON (In)
STRT . . . . . (In)
STOP . . . . . / (OUT)
CLOCK . . . . . / (OUT)
HOLD . . . . . OFF (OUT)
SELF TEST . . . OFF (OUT)
```

3455-D-19A

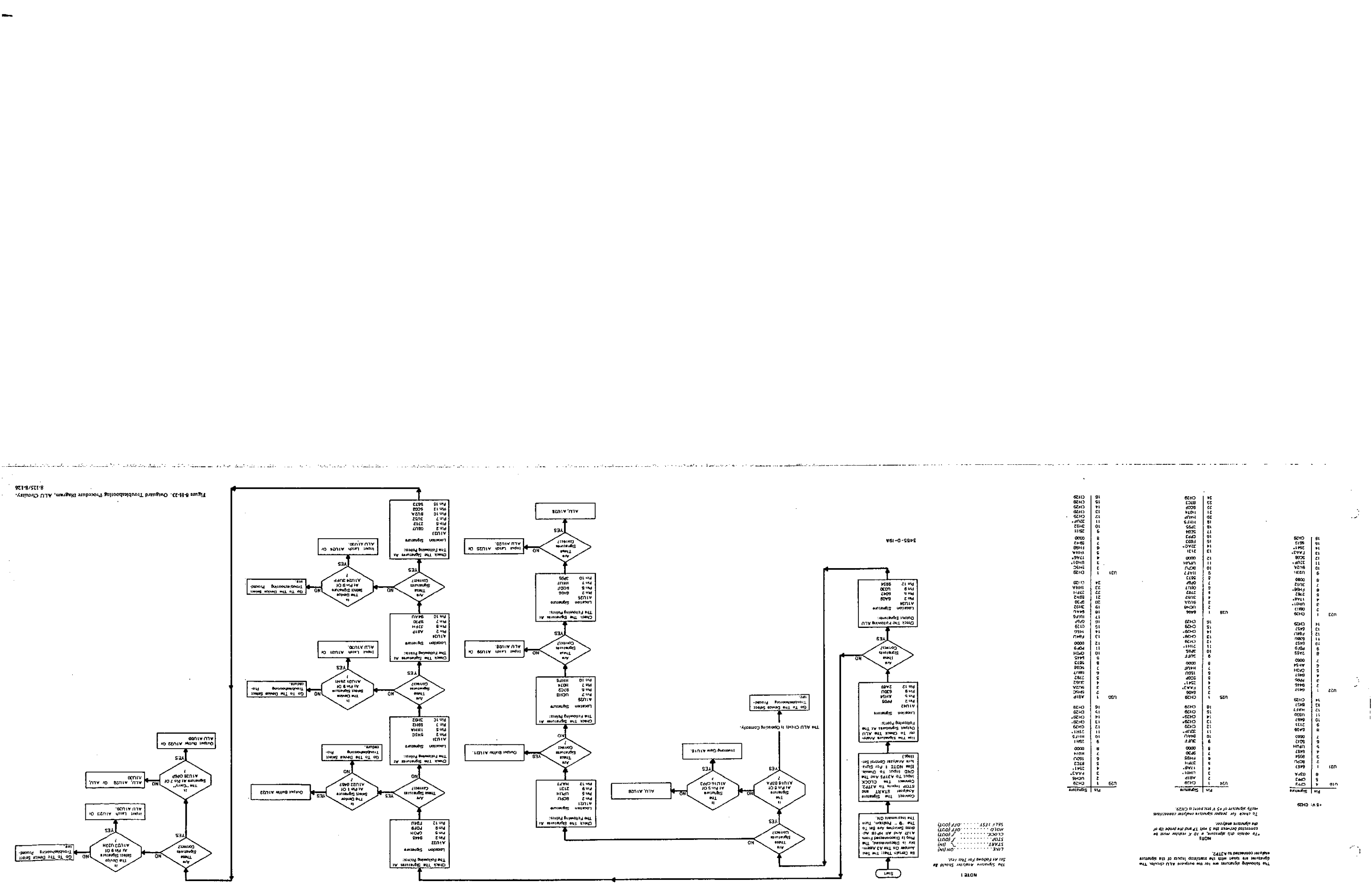

Figure 8-EE-23. Unguard Troubleshooting Procedure Diagram, ALU Circuitry.
8-125/8-126

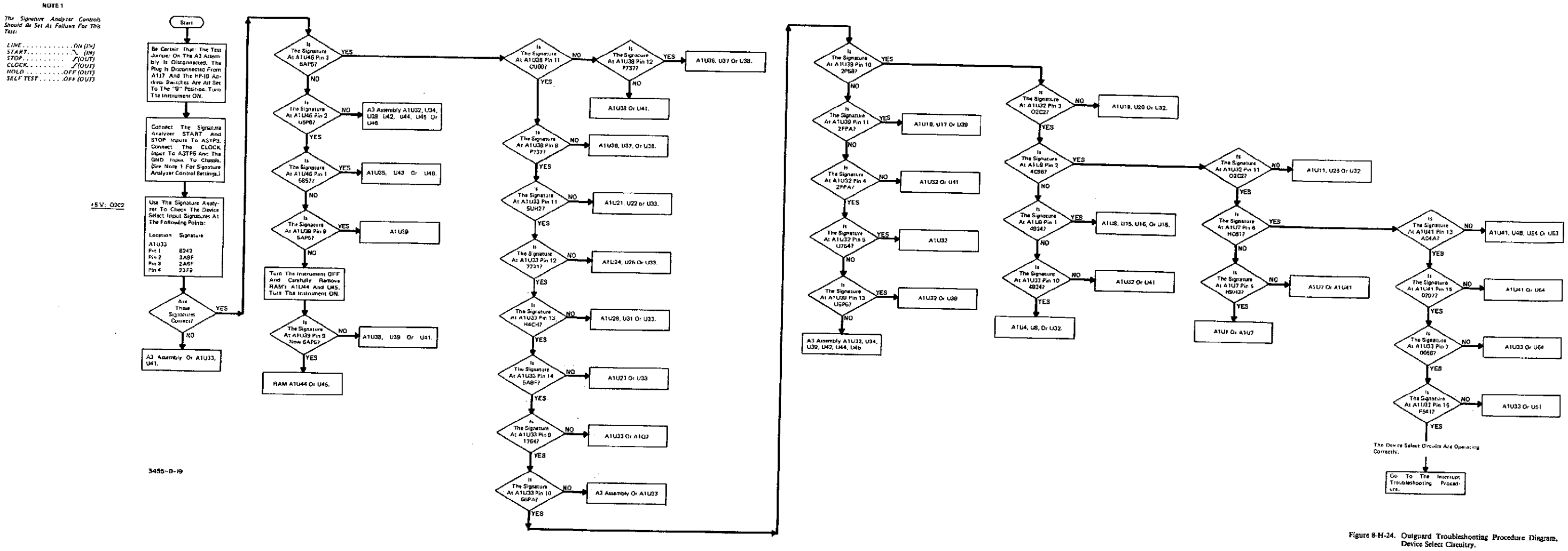

Figure 8-H-24. Outguard Troubleshooting Procedure Diagram, Device Select Circuitry.

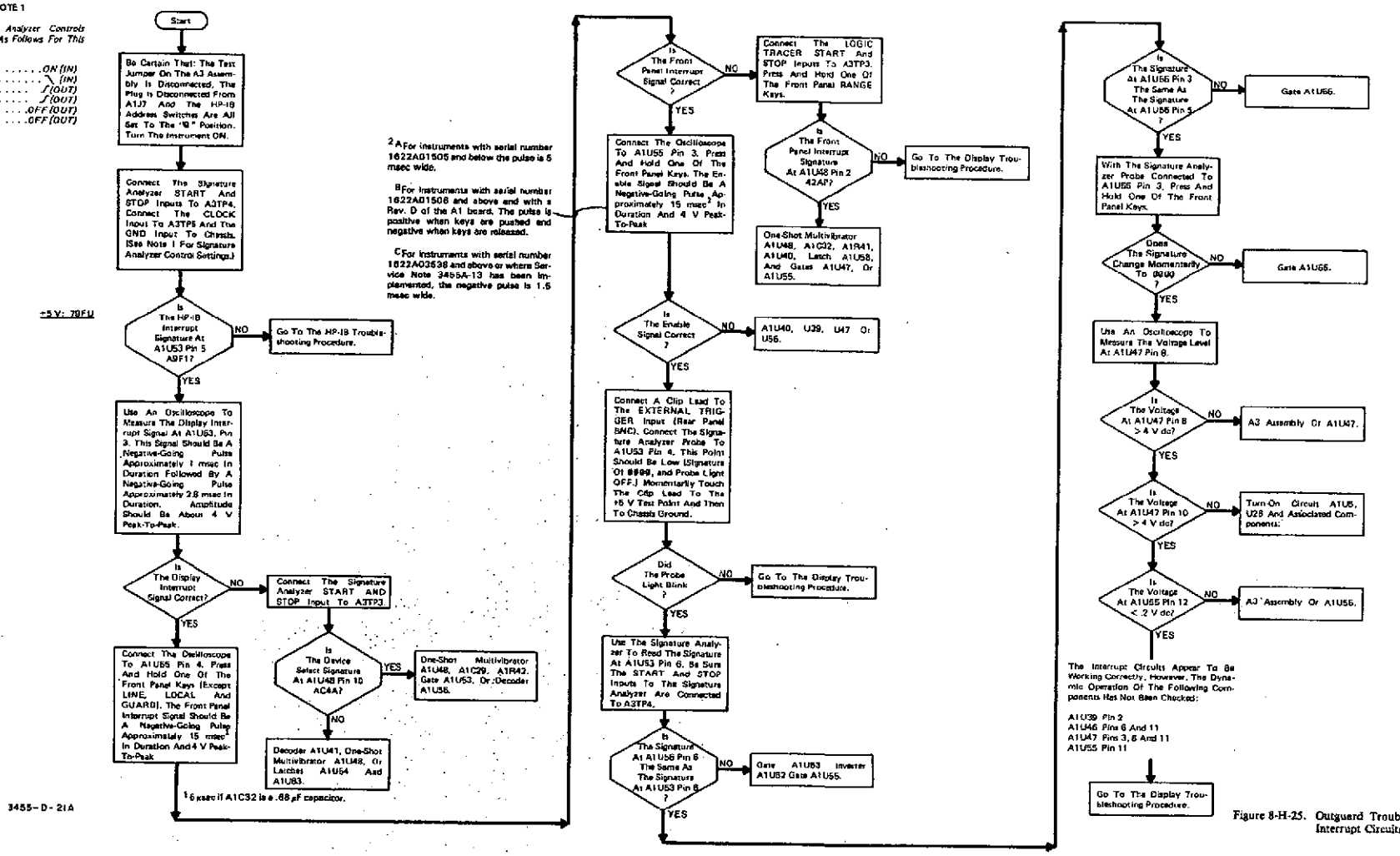

3455-D-21A

Figure 8-H-25. Outguard Troubleshooting Procedure Diagram, Interrupt Circuitry.

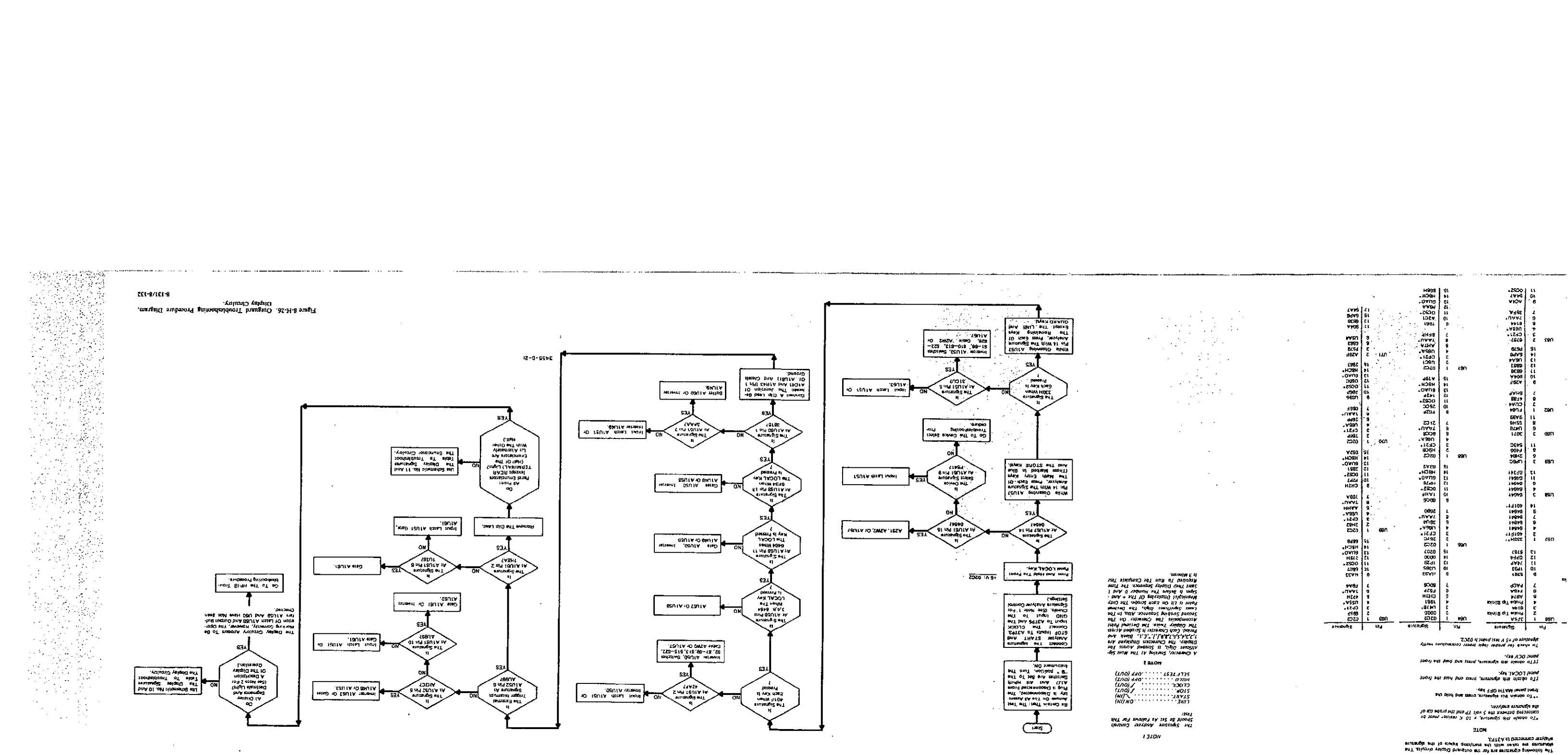
Start
Connect, Testing AT That Must Supply Digital Data. It Should Access The Display. The Character Displayed Are "1,2,3,4,5,6,7,8,9,A,B,C,D,E, Blank And Period. Each Character Is Divided Into Seven Individual Segments. The Character On The Second Digit Is Lit On Each Second. Each Segment Is Lit Or Dark. Segment Data In The Form Of A Seven-Bit Number. The Most Significant Bit Is Ignored. Bits 0 Through 6 Represent The Segments A Through G, Respectively. The Most Significant Bit Of The Number D And I Specify The Number Of Seconds The Digit Should Be Displayed. The Time Required To Run The Complete Test Is 5 Minutes.
NOTE 1
The Tester Should Be Set At Failure For This Test.
NOTE 2
Be Certain That The Test Number Is Incremented. The Display Is Incremented From "0" To "9" Then Back To "0" Again. Each Time The Display Is Incremented, The Decimal Point Should Be Lit.
Connect The Jumpers And Both Inputs To A3754 And Connect The CLOCK Input To A3754 And Connect The Oscilloscope To The Output Of A3754. Set The Oscilloscope Analyzer To Trigger On The Rising Edge Of The CLOCK Signal.
Press And Hold The Front Panel LOCAL Key.
Is The Signature At A1U57 Pin 14 0A0A?
NO
YES
Is The Signature At A1U57 Pin 15 0A0A?
NO
YES
A231, A2N2, Or A1U57.
Write Ones To The Display Select Register.
Is The Signature At A1U57 Pin 9 .Pd17?
NO
YES
Input Latch A1U57
Write Zeros To The Display Select Register.
Is The Signature At A1U57 Pin 13 3207?
NO
YES
Input Latch A1U57 Or A1U62.
Write Ones To The Display Segment Register.
Is The Signature At A1U57 Pin 5 3107?
NO
YES
Input Latch A1U57 Or A1U62.
Write Zeros To The Display Segment Register.
Is The Signature At A1U57 Pin 12 3207?
NO
YES
Input Latch A1U57
Write Ones To The Display Segment Register.
Is The Signature At A1U57 Pin 4 3107?
NO
YES
Input Latch A1U57
Write Zeros To The Display Segment Register.
Is The Signature At A1U57 Pin 11 3207?
NO
YES
Input Latch A1U57
Write Ones To The Display Segment Register.
Is The Signature At A1U57 Pin 6 3107?
NO
YES
Input Latch A1U57
Write Zeros To The Display Segment Register.
Is The Signature At A1U57 Pin 10 3207?
NO
YES
Input Latch A1U57
Write Ones To The Display Segment Register.
Is The Signature At A1U57 Pin 7 3107?
NO
YES
Input Latch A1U57
Write Zeros To The Display Segment Register.
Is The Signature At A1U57 Pin 3 3207?
NO
YES
Input Latch A1U57
Write Ones To The Display Segment Register.
Is The Signature At A1U57 Pin 2 3107?
NO
YES
Input Latch A1U57
Write Zeros To The Display Segment Register.
Is The Signature At A1U57 Pin 1 3207?
NO
YES
Input Latch A1U57
Write Ones To The Display Segment Register.
Is The Signature At A1U57 Pin 15 3107?
NO
YES
Input Latch A1U57
Write Zeros To The Display Segment Register.
Is The Signature At A1U57 Pin 14 3207?
NO
YES
Input Latch A1U57
Write Ones To The Display Segment Register.
Is The Signature At A1U57 Pin 13 3107?
NO
YES
Input Latch A1U57
Write Zeros To The Display Segment Register.
Is The Signature At A1U57 Pin 12 3207?
NO
YES
Input Latch A1U57
Write Ones To The Display Segment Register.
Is The Signature At A1U57 Pin 11 3107?
NO
YES
Input Latch A1U57
Write Zeros To The Display Segment Register.
Is The Signature At A1U57 Pin 10 3207?
NO
YES
Input Latch A1U57
Write Ones To The Display Segment Register.
Is The Signature At A1U57 Pin 9 3107?
NO
YES
Input Latch A1U57
Write Zeros To The Display Segment Register.
Is The Signature At A1U57 Pin 8 3207?
NO
YES
Input Latch A1U57
Write Ones To The Display Segment Register.
Is The Signature At A1U57 Pin 7 3107?
NO
YES
Input Latch A1U57
Write Zeros To The Display Segment Register.
Is The Signature At A1U57 Pin 6 3207?
NO
YES
Input Latch A1U57
Write Ones To The Display Segment Register.
Is The Signature At A1U57 Pin 5 3107?
NO
YES
Input Latch A1U57
Write Zeros To The Display Segment Register.
Is The Signature At A1U57 Pin 4 3207?
NO
YES
Input Latch A1U57
Write Ones To The Display Segment Register.
Is The Signature At A1U57 Pin 3 3107?
NO
YES
Input Latch A1U57
Write Zeros To The Display Segment Register.
Is The Signature At A1U57 Pin 2 3207?
NO
YES
Input Latch A1U57
Write Ones To The Display Segment Register.
Is The Signature At A1U57 Pin 1 3107?
NO
YES
Input Latch A1U57
Write Zeros To The Display Segment Register.
Is The Signature At A1U57 Pin 15 3207?
NO
YES
Input Latch A1U57
Write Ones To The Display Segment Register.
Is The Signature At A1U57 Pin 14 3107?
NO
YES
Input Latch A1U57
Write Zeros To The Display Segment Register.
Is The Signature At A1U57 Pin 13 3207?
NO
YES
Input Latch A1U57
Write Ones To The Display Segment Register.
Is The Signature At A1U57 Pin 12 3107?
NO
YES
Input Latch A1U57
Write Zeros To The Display Segment Register.
Is The Signature At A1U57 Pin 11 3207?
NO
YES
Input Latch A1U57
Write Ones To The Display Segment Register.
Is The Signature At A1U57 Pin 10 3107?
NO
YES
Input Latch A1U57
Write Zeros To The Display Segment Register.
Is The Signature At A1U57 Pin 9 3207?
NO
YES
Input Latch A1U57
Write Ones To The Display Segment Register.
Is The Signature At A1U57 Pin 8 3107?
NO
YES
Input Latch A1U57
Write Zeros To The Display Segment Register.
Is The Signature At A1U57 Pin 7 3207?
NO
YES
Input Latch A1U57
Write Ones To The Display Segment Register.
Is The Signature At A1U57 Pin 6 3107?
NO
YES
Input Latch A1U57
Write Zeros To The Display Segment Register.
Is The Signature At A1U57 Pin 5 3207?
NO
YES
Input Latch A1U57
Write Ones To The Display Segment Register.
Is The Signature At A1U57 Pin 4

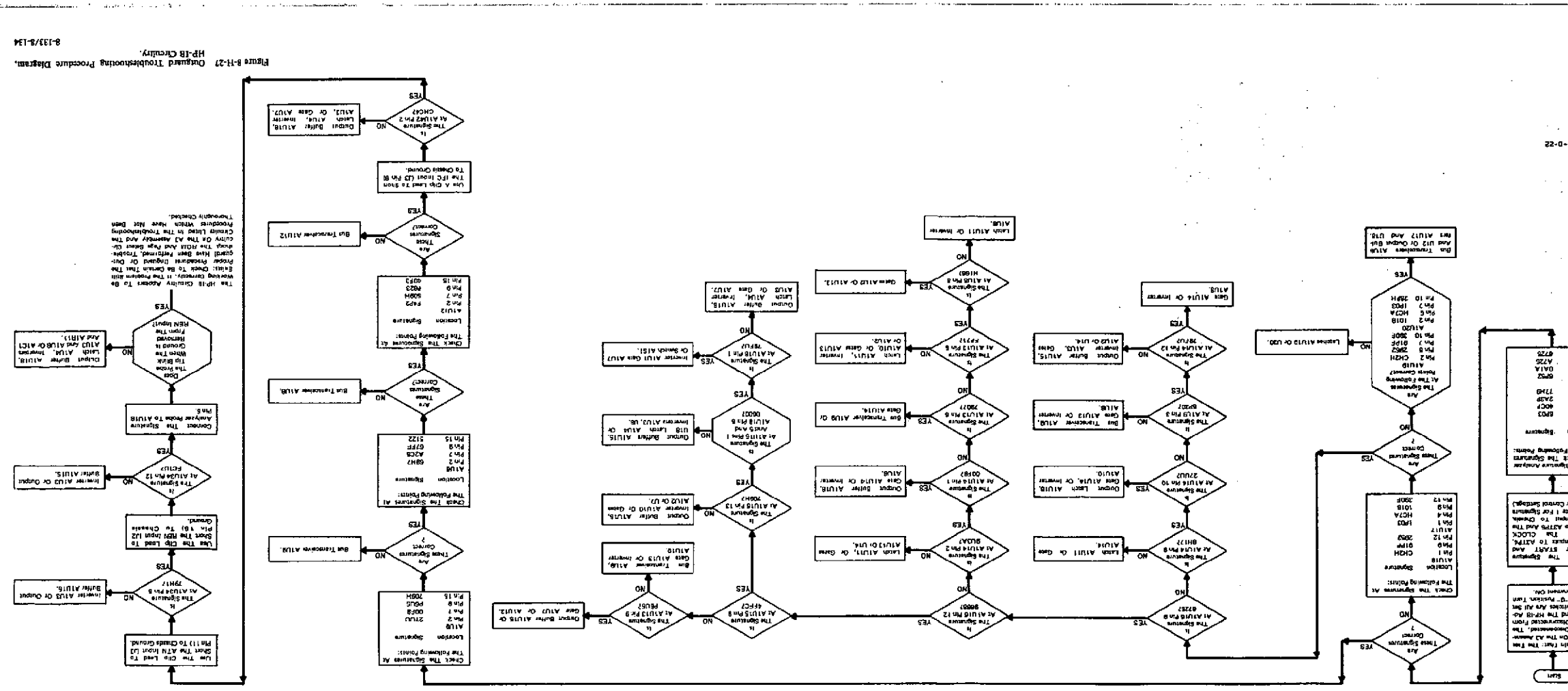
Start
Set The Counter To Zero
Set The Error Flag To Zero
Set The Pointer To The Beginning Of The Table
Get The Next Character From The Table
Is The Character A Space?
Add One To The Counter
Is The Character A Period?
Add One To The Counter
Is The Character A Comma?
Add One To The Counter
Is The Character A Semicolon?
Add One To The Counter
Is The Character A Colon?
Add One To The Counter
Is The Character A Question Mark?
Add One To The Counter
Is The Character A Left Parenthesis?
Add One To The Counter
Is The Character A Right Parenthesis?
Add One To The Counter
Is The Character A Left Bracket?
Add One To The Counter
Is The Character A Right Bracket?
Add One To The Counter
Is The Character A Left Brace?
Add One To The Counter
Is The Character A Right Brace?
Add One To The Counter
Is The Character A Left Angle Bracket?
Add One To The Counter
Is The Character A Right Angle Bracket?
Add One To The Counter
Is The Character A Slash?
Add One To The Counter
Is The Character A Backslash?
Add One To The Counter
Is The Character A Vertical Bar?
Add One To The Counter
Is The Character A Tilde?
Add One To The Counter
Is The Character A Caret?
Add One To The Counter
Is The Character A Dollar Sign?
Add One To The Counter
Is The Character A Percent Sign?
Add One To The Counter
Is The Character An Ampersand?
Add One To The Counter
Is The Character An Asterisk?
Add One To The Counter
Is The Character An Underscore?
Add One To The Counter
Is The Character An Equal Sign?
Add One To The Counter
Is The Character A Plus Sign?
Add One To The Counter
Is The Character A Number?
Add One To The Counter
Is The Character A Letter?
Add One To The Counter
Is The Character A Lowercase Letter?
Add One To The Counter
Is The Character An Uppercase Letter?
Add One To The Counter
Is The Character A Control Character?
Add One To The Counter
Is The Character A Blank?
Add One To The Counter
Is The Character A Tab?
Add One To The Counter
Is The Character A Carriage Return?
Add One To The Counter
Is The Character A Line Feed?
Add One To The Counter
Is The Character A Form Feed?
Add One To The Counter
Is The Character A Vertical Tab?
Add One To The Counter
Is The Character A Backspace?
Add One To The Counter
Is The Character A Delete?
Add One To The Counter
Is The Character A Null?
Add One To The Counter
Is The Character A Bell?
Add One To The Counter
Is The Character A Escape?
Add One To The Counter
Is The Character A Shift Out?
Add One To The Counter
Is The Character A Shift In?
Add One To The Counter
Is The Character A Data Link Escape?
Add One To The Counter
Is The Character A Device Control 1?
Add One To The Counter
Is The Character A Device Control 2?
Add One To The Counter
Is The Character A Device Control 3?
Add One To The Counter
Is The Character A Device Control 4?
Add One To The Counter
Is The Character A Negative Acknowledge?
Add One To The Counter
Is The Character A Synchronous Idle?
Add One To The Counter
Is The Character An End Of Transmission Block?
Add One To The Counter
Is The Character A Start Of Header?
Add One To The Counter
Is The Character A Start Of Text?
Add One To The Counter
Is The Character An End Of Text?
Add One To The Counter
Is The Character An Enquiry?
Add One To The Counter
Is The Character An Acknowledge?
Add One To The Counter
Is The Character A Bell?
Add One To The Counter
Is The Character A Backspace?
Add One To The Counter
Is The Character A Horizontal Tab?
Add One To The Counter
Is The Character A Line Feed?
Add One To The Counter
Is The Character A Vertical Tab?
Add One To The Counter
Is The Character A Form Feed?
Add One To The Counter
Is The Character A Carriage Return

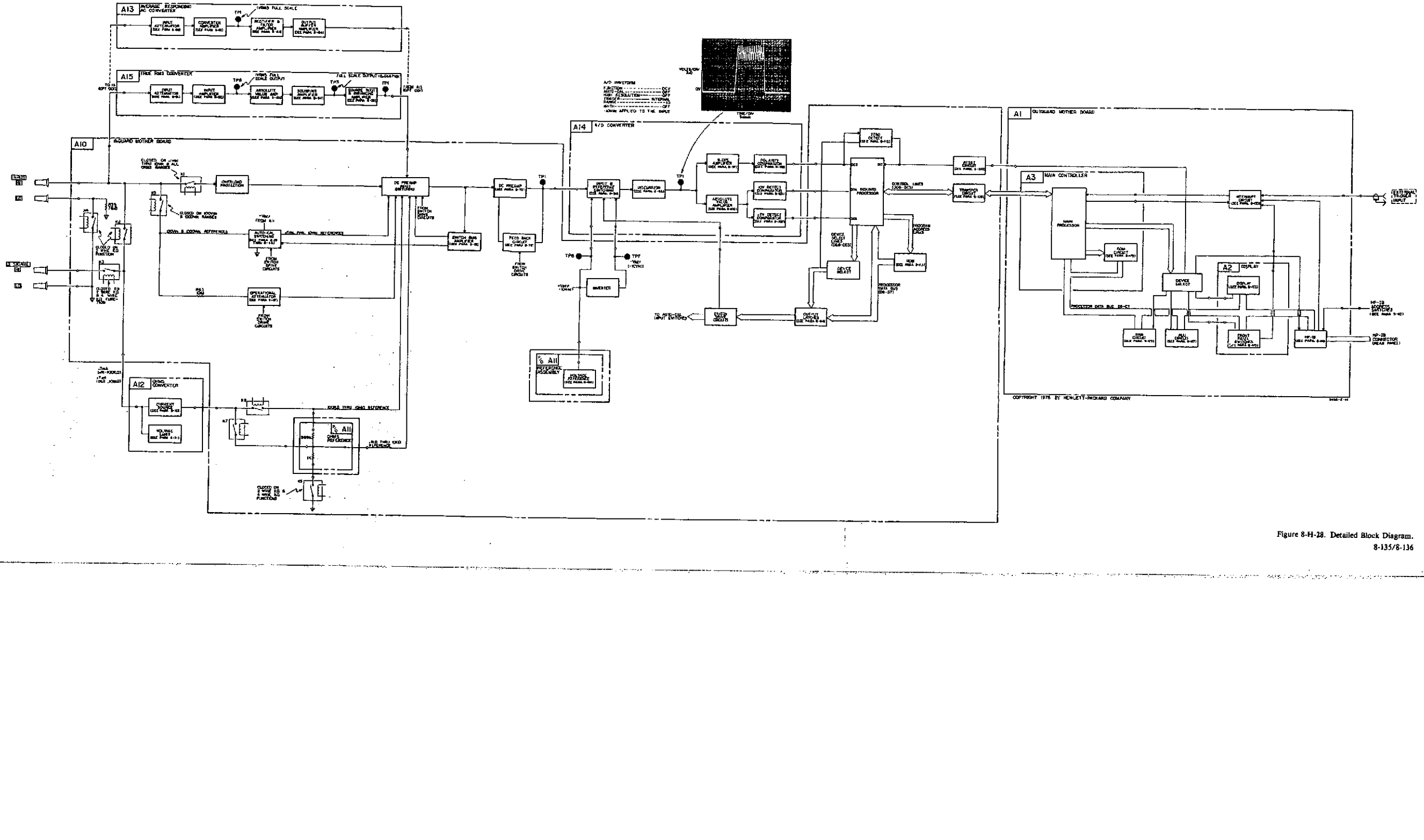

Figure 8-H-28. Detailed Block Diagram.
8-135/8-136

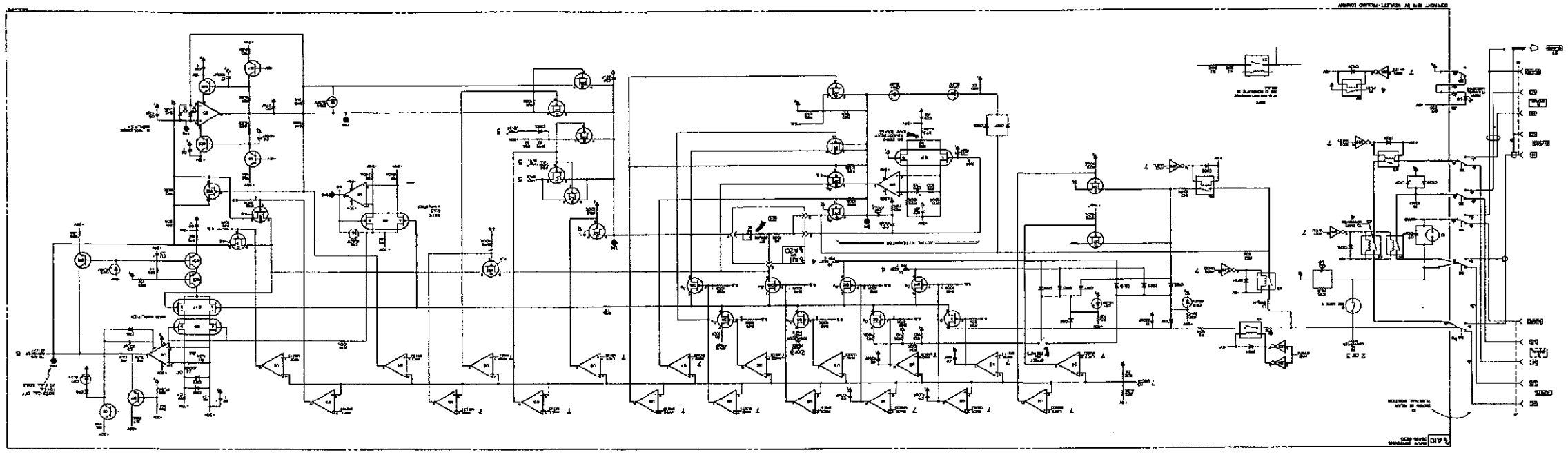

NOTE
The Offset Adjustment is done by Connecting a resistor between the CHECKED pad and PINA. Ref. "A" ... Ref. Refer to Section V for the Offset Adjustment Procedure.

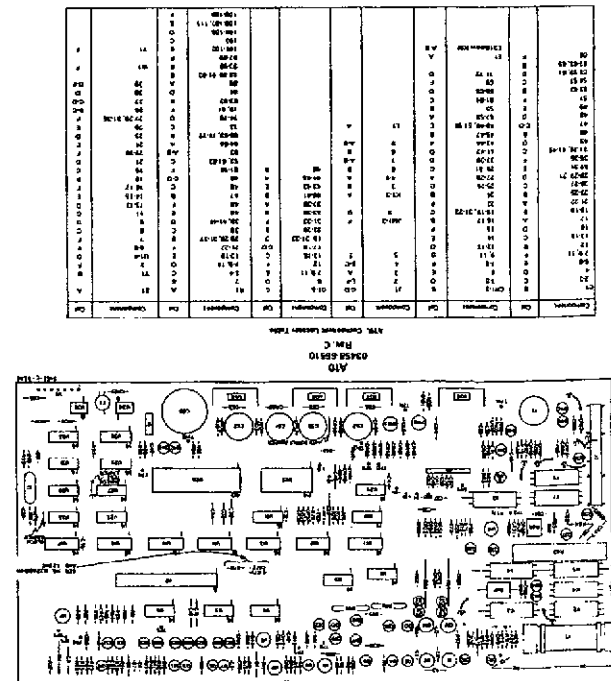

AA For instruments with serial numbers 1532A00500 and below, FETs Q3, Q4, Q18, Q19, Q13, Q12, Q21, Q38, and D32 had P/Ns 5081-1047. These FETs, analyzing FET10 and Q12, had their cases connected to the drain bus (D). Also, Q13 through D10 had their Source (S) and Drains (D) connected to the opposite order. When replacing any of the above FETs, use the replacement part number in Table 6-3.

AC Serial numbers 1532A01805 and above replaced QR: 0160-0154 (.22 µF)
MN: 0960-3028 (2 R)
The new values improve stability in the X26AK configuration.

A10
03458 68610
Rev. C
ATE, Component Table

Component	Ref	Component	Ref	Component	Ref	Component	Ref	Component	Ref
0.1µF	C	0.1µF	C	0.1µF	C	0.1µF	C	0.1µF	C

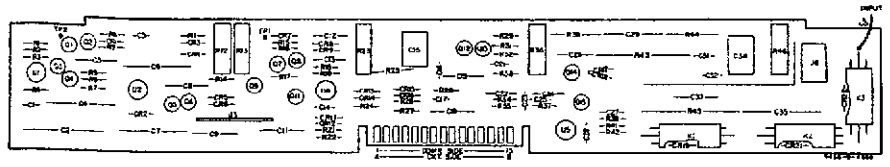

ΔA For serial numbers 1622A02436 and above. The preferred value for C25 was changed from part number 0180-2190 (33 pF) to improve frequency response near 10 kHz.

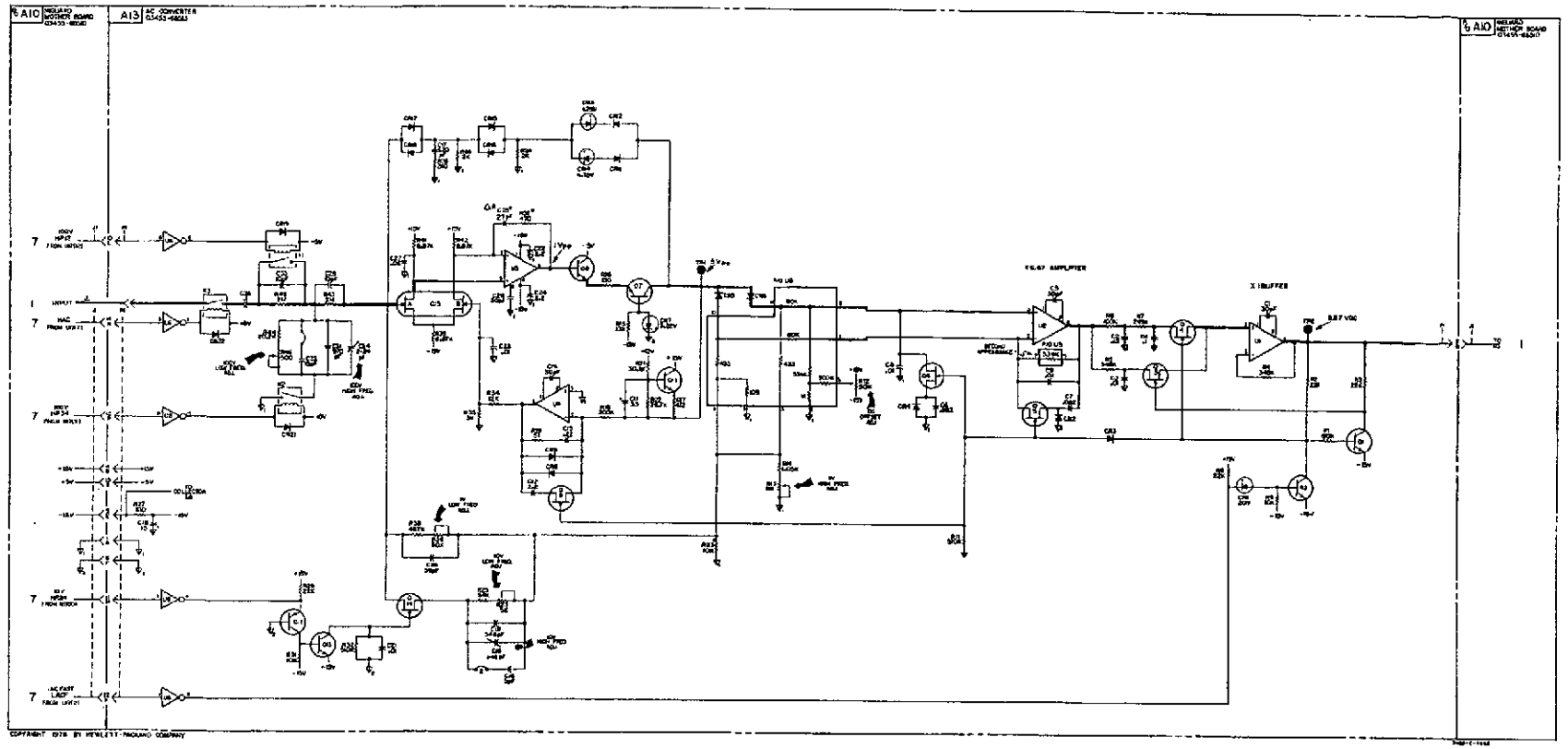

Figure 8-H-30. Average Responding AC Convertor Schematic.

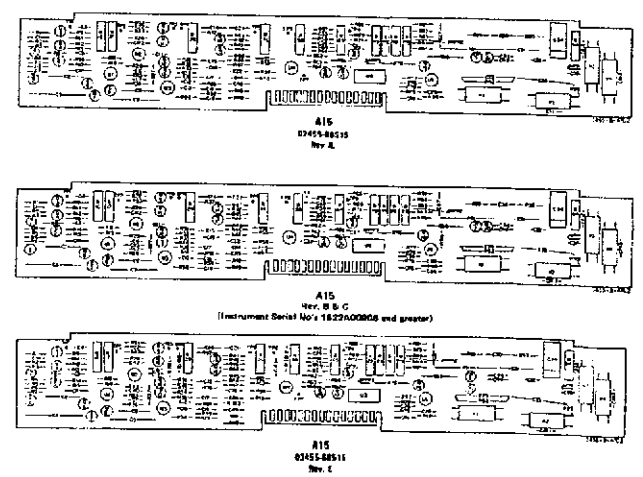

A15
03455-66515
Rev. A

A15
Rev. B & C
(Instrument Serial No's 1827A00805 and greater)

A15
03455-66515
Rev. C

(Instrument Serial No's 1822A00836 and below)

4A C37, C38 and R97 have been added and the value of A1U5R59 has been changed from 10 kΩ to 100 kΩ to eliminate transients during auto-ranging which cause inaccurate "fast" readings. (Instrument Serial No's 1822A00906 and greater.)

4B R89 has been made a "selected" value to improve the accuracy at 1 MHz. (Instrument Serial No's 1522A00101 and greater.)

4C C36 and R86 have been added to reduce offset at elevated temperatures. (Instrument Serial No's 1822A00306 and greater.)

4D Relay K3 has been changed to a different type to prevent arcing during auto-ranging when 1000 V is applied to the input. (Instrument Serial No's 1822A00906 and greater.)

4E The values of potentiometers R12 and R15 have been decreased to improve the temperature stability of the input amplifier circuitry. The value of resistors R61 and R65 have been increased to center the pots. Previous values were: R12, 200; R75, 2 K; R61, 5.11 K; R65, 562. These changes have been made on instrument with Serial No's 1822A00906 and greater.

4F The following component changes have been made to improve the down-scale linearity of the RMS converter: R17: from 2 kΩ to 5 kΩ. R23, from 68 Ω to 100 Ω). R26: from 25 kΩ to 100 kΩ. R51: from 100 Ω to 200 Ω. R62: from 10 kΩ to 20 kΩ. R53, from 5 kΩ to 10 kΩ. These changes have been made on instruments with Serial No's 1822A0611 and greater.

1G Serial numbers 1522A01000 and above. Replaces 0757-0417 (562 Ω) to increase the zero adjustment range.

4H Serial numbers 1822A01808 and above replaces 6060-9080. The new part is not hand-selected.

4I Serial numbers 1822A01655 and above replaces R36, 0698-4450 (324 Ω, and R95: 0757-0407 (200 Ω). R95 provides improved dc compensation. R36 essentially improves temperature stability.

4J Serial numbers 1522A02356 and above. Added as an bypass of CR3.

4K Serial numbers 1822A01956 and above. Replaces 0757-0468 (825 K) to increase the offset adjustment range.

4M Serial numbers 1822A01206 and above the following component changes were made to improve input amplifier temperature stability:

Ref Des.	Part No.
R31:	0698-3382 (5450)
R82:	0698-4308 (16.0 K)
R83:	0698-4478 (15.7Ω)
R85:	0698-4459 (534)
R71:	See padding list as per Table 5-1.

4N Serial numbers 1622A03136 and above. Improved specifications on U3 and U1 make the expanded offset adjustment range no longer required. R18 and R31 were changed from part number 0698-4540 (412 K) to 732 K to reduce this range and improve stability.

4Q R66 was changed from 200 K (0683-2045) to 15 K (0683-1535) to improve the fast reading after switching from the 10 V range to the 100 V range.

4P C33 was changed from .1 μF (0160-3881) to .22 μF (0180-3885) to improve accuracy at 30 Hz.

4Q The Schematic applies for Revision 4 printed circuit boards. For older revision boards, do the following:

Change	To	Part No.
C12	200PF	0140-0198
C13	10PF	0160-2253
C18	10PF	0160-2253
C32	4.3PF	0160-2200
C35	2.7PF	0698-8350
R48	300	0698-4447
R47	3.32K	0757-0433
R48	5.11K	0757-0442
R51	100	2100-3098
R81	5.49K	0698-8984

Delete C41, R100, R101, and R102, and connect the base of Q88 to ground.

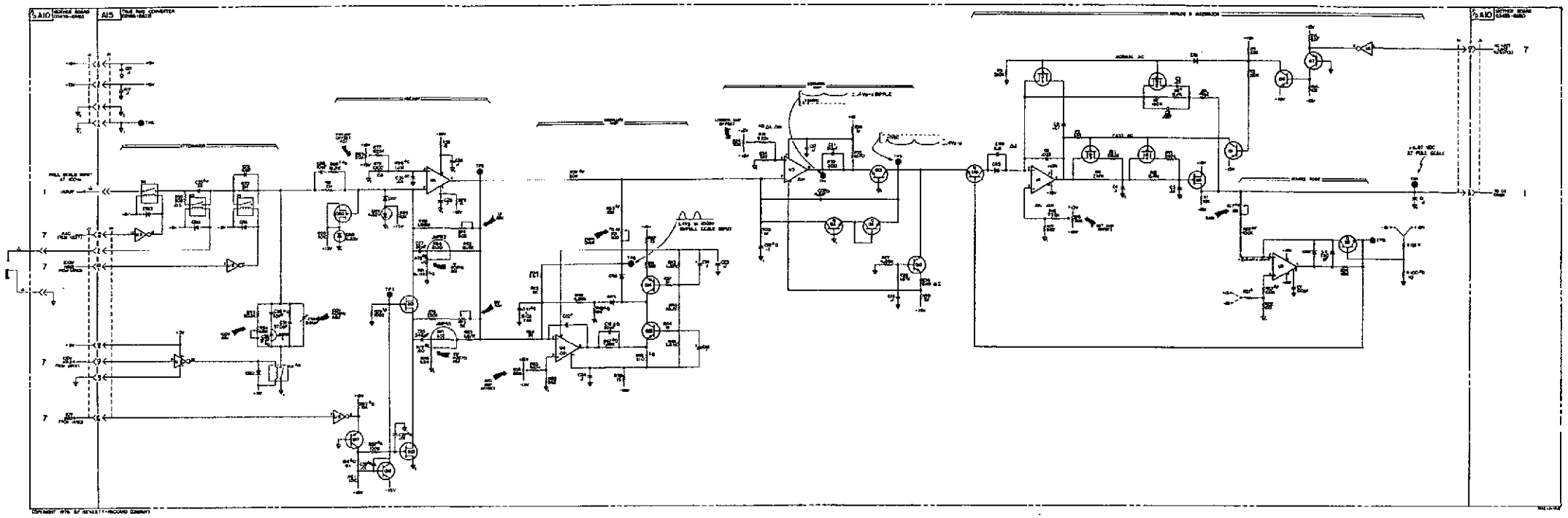

3

Figure 8-H-31. True RMS AC Convertor Schematic.
Rev A 8-141/8-142

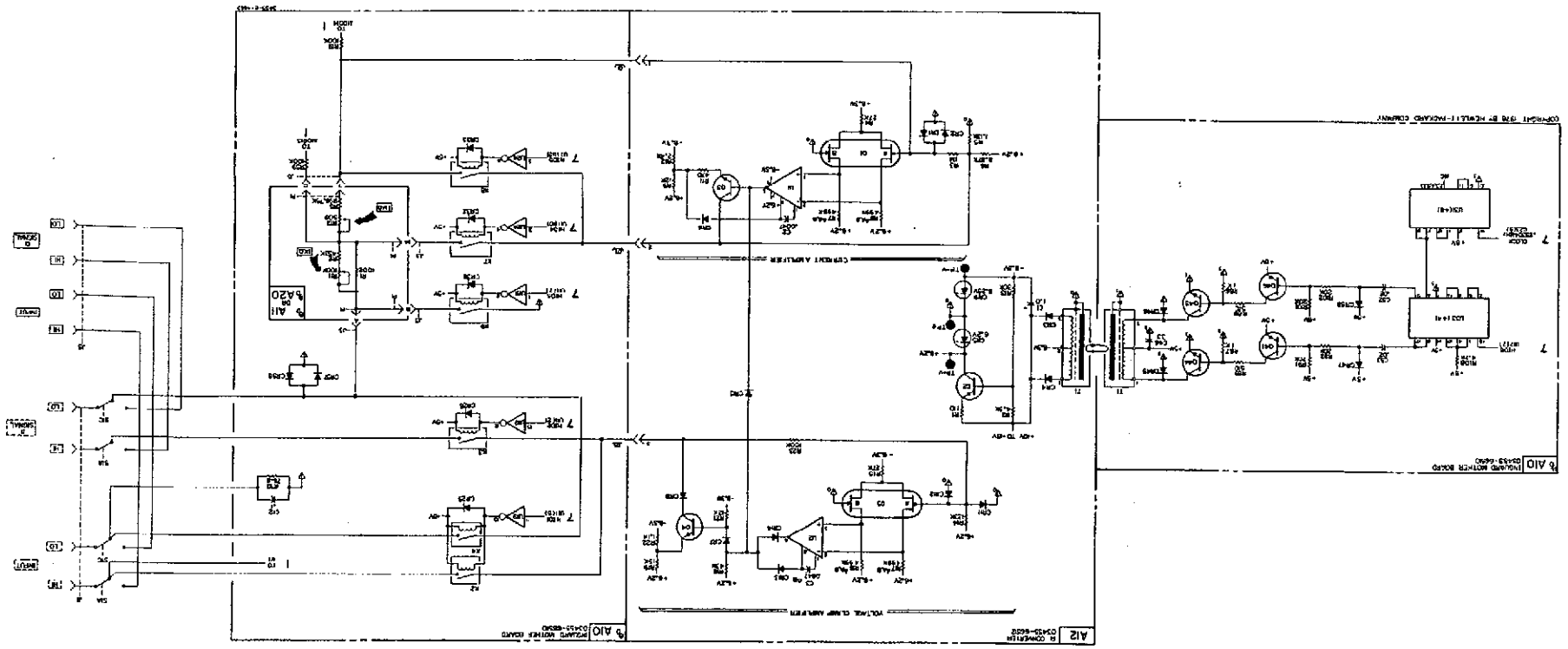

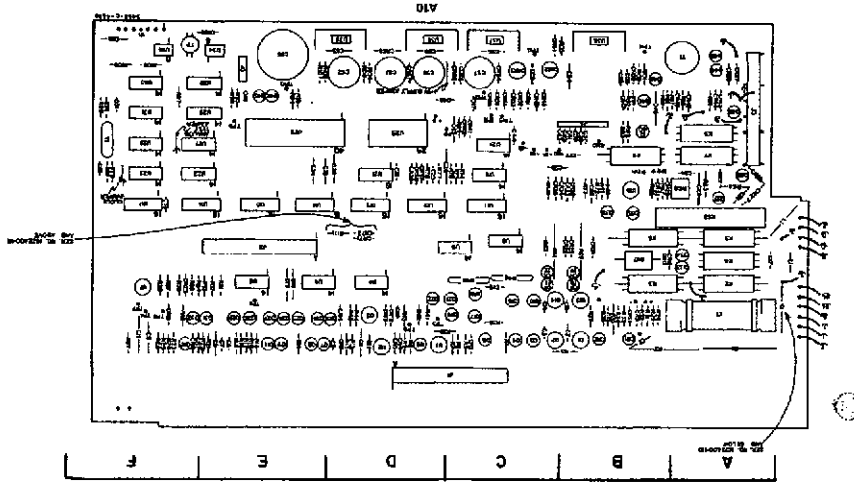

A10
03455-66610
Rev. C

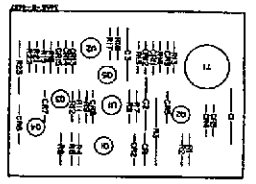

A12
03455-66612
Rev. A

NOTE 1: UNKNOWN RESISTANCE IS MEASURED –

NOTE 2: REFERENCE RESISTANCE IS MEASURED +

NOTE 3: K9 IS CLOSED DURING REFERENCE MEASUREMENT

NOTE 4: K2 AND K4 ARE CLOSED DURING 2-WIRE KΩ MEASUREMENTS

NOTE 5: K3 IS CLOSED DURING 4-WIRE KΩ MEASUREMENTS

ΔA The value of resistors R7, R8, R10, and R17 have been changed from 4.99 kΩ to 10 kΩ to properly bias differential amplifiers U1 and U5. These changes have been made on instruments with Serial No's 1022A01056 and greater.

ΔB The value of resistor R7, R8, R10, R15 have been changed from 10 K (1073-0442) to 4.99 K (0698-3279) and C3 has been changed from .033 μF (0140-0164) to .0047 μF (0180-3167) to eliminate flat reading error. These changes have been made on instruments with serial numbers 1022A04831 and above.

Figure 8-H-32. Ohms Contractor Schematic

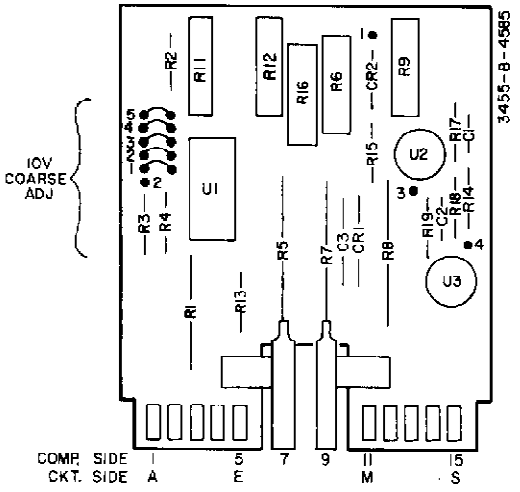

A11
03455-66511
Rev. A

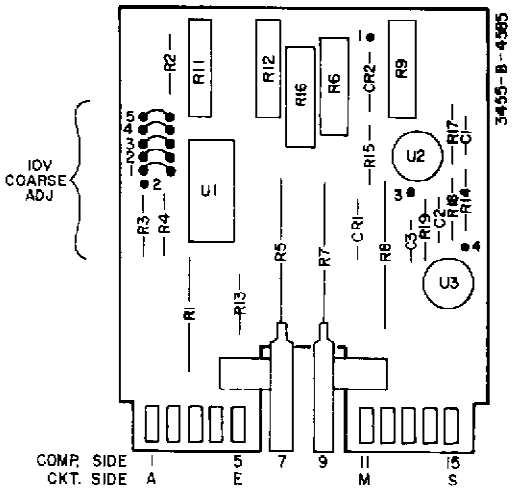

A11
03455-66511
Rev. B

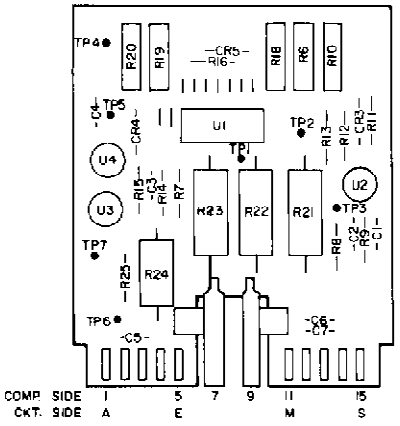

A20
03455-66520
Rev. A

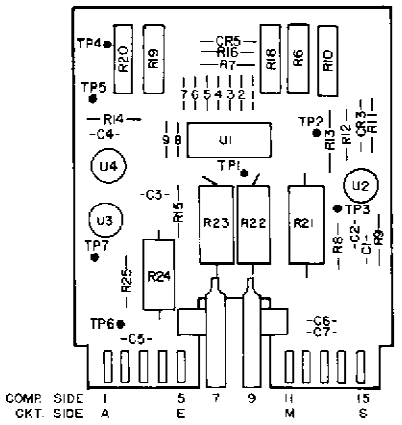

A20
03455-66520
Rev. B

Δ Serial Numbers 1622A016956 and above A20 replaces all, part number 03455-66511.

Δ_A Serial numbers 1622A02106 and above replaces 0160-0820 (.05 μF) as frequency compensation to supress U2 Oscillations.

Δ_B Replaced with A20 assembly only for serial numbers 1622A05871 and above.

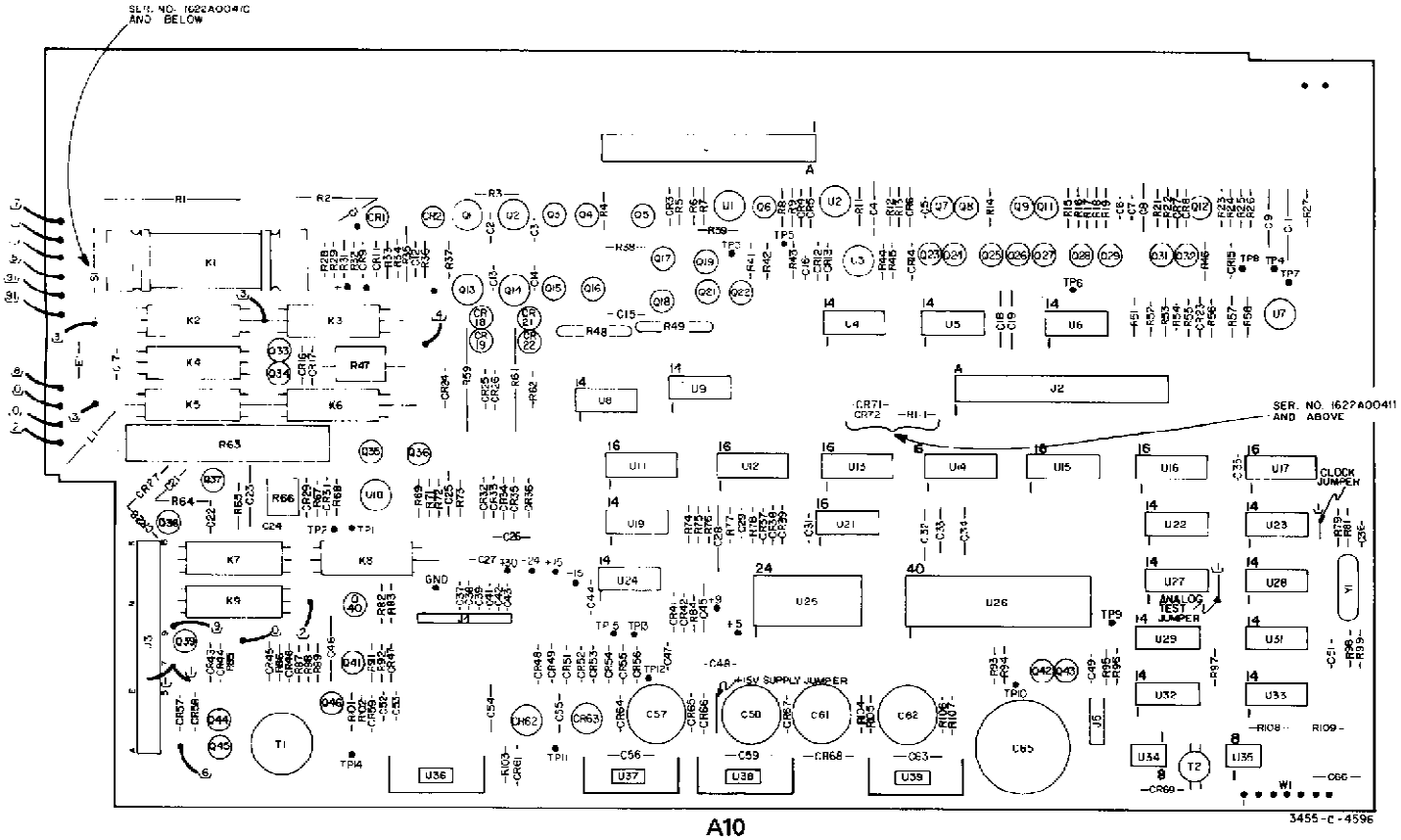

A10
03455-66510
Rev. C

A10. Component Locator Table.

Component	Col	Component	Col	Component	Col	Component	Col	Component	Col	Component	Col
C1	B	CR1-2	B	J1	C-D	D1-5	C	R1	A	S1	A
2-3	C	3-5	D	2	E-F	6	D	2	B		
4	D	6	E	3	A	7-9, 11	E	3-4	C	T1	B
5-6	E	7-8	F	4	B-C	12	F	7-9, 11	D	2	F
7-9, 11	F	9, 11	B	5	E	13-16	C	12-19	E	U1-4	D
12	B	12-13	D			17-18	C-D	21-27	F	5-6	E
13-15	C	14	E			19, 21 22	D	28-29, 31-37	B	7	F
16	D	15	F			23-29	E	38	C	8	C
17	A	16-17	B	JM1-2	F	31-32	F	39, 41-44	D	9	D
18-19	E	18-19, 21 22	C	3	D	33-36	B	45	E	11	C
21-22	A	23	F			37-39	A	46	F	12 13	D
23-25	B	24	B	K1 2	A	40-41	B	47	B	14-15	E
26-27	C	25-26	C	3	B	42-43	E	48	C	16-17	F
28-29, 31	D	27-28	A	4-5	A	44-45	A	49	C-D	18	B
32-34	E	29, 31	C	6	B	46	B	51-58	F	19	C
35-36	F	37-39	D	7	A-B			59, 61 62	C	21	D
37-39, 41-49	C	41-42	D	8	B			63	A-B	22-23	F
45	D	43-44	A	9	A B			64-65	A	24	C
46	B	45-47	B					66-69, 71 72	B	25	D
47	C-D	48-49, 51-56	C	L1	A			73	C	26	E
48	D	57 58	A					74-76	D	27-29, 31-35	F
49	E	59	B					79, 81	F	36	B-C
51	F	61-64	C					82-83	B	37	C-D
52-53	B	65 68	D					84	D	38	D
54-57	C	69	F					85	A	39	D-E
58-59, 61	D	71-72	D					86 89, 91-92	B		
62 63, 65	F							93-96	E	W1	F
66	F	E1	A					97-99	F		
		E2 (Below K9)	A-B					101 102	B	Y1	F
								103	C		
								104 105	D		
								106-107, 111	F		
								108-109	F		

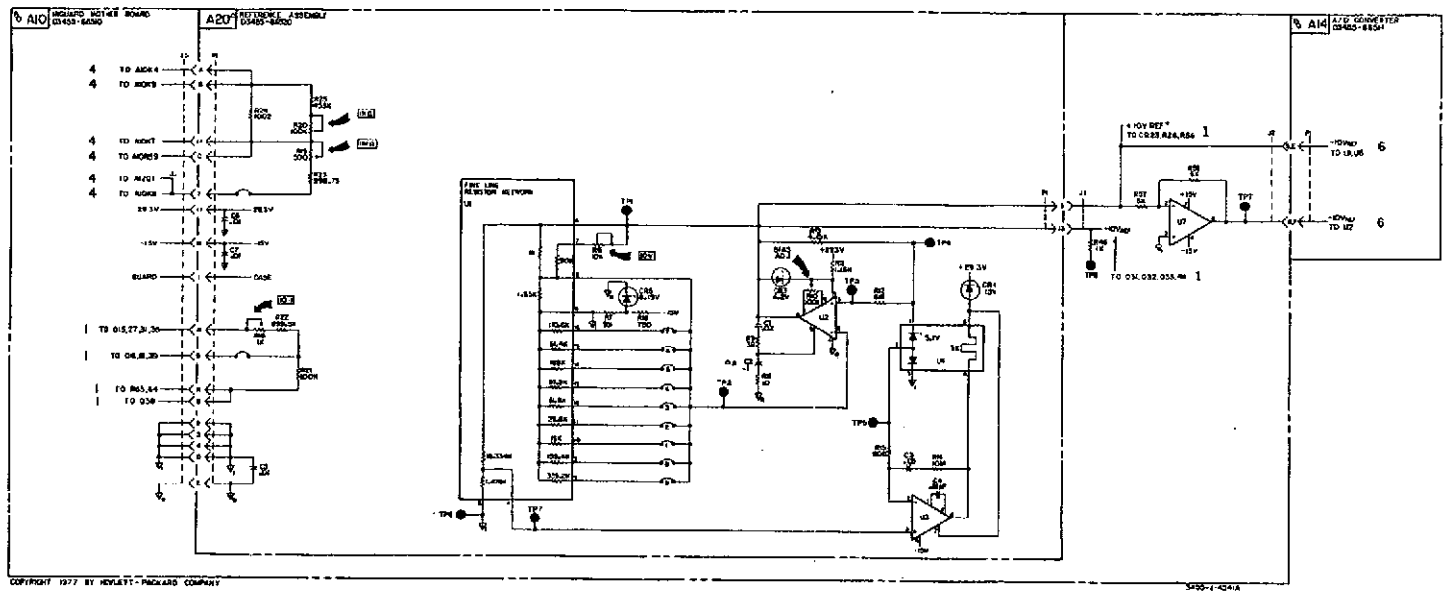

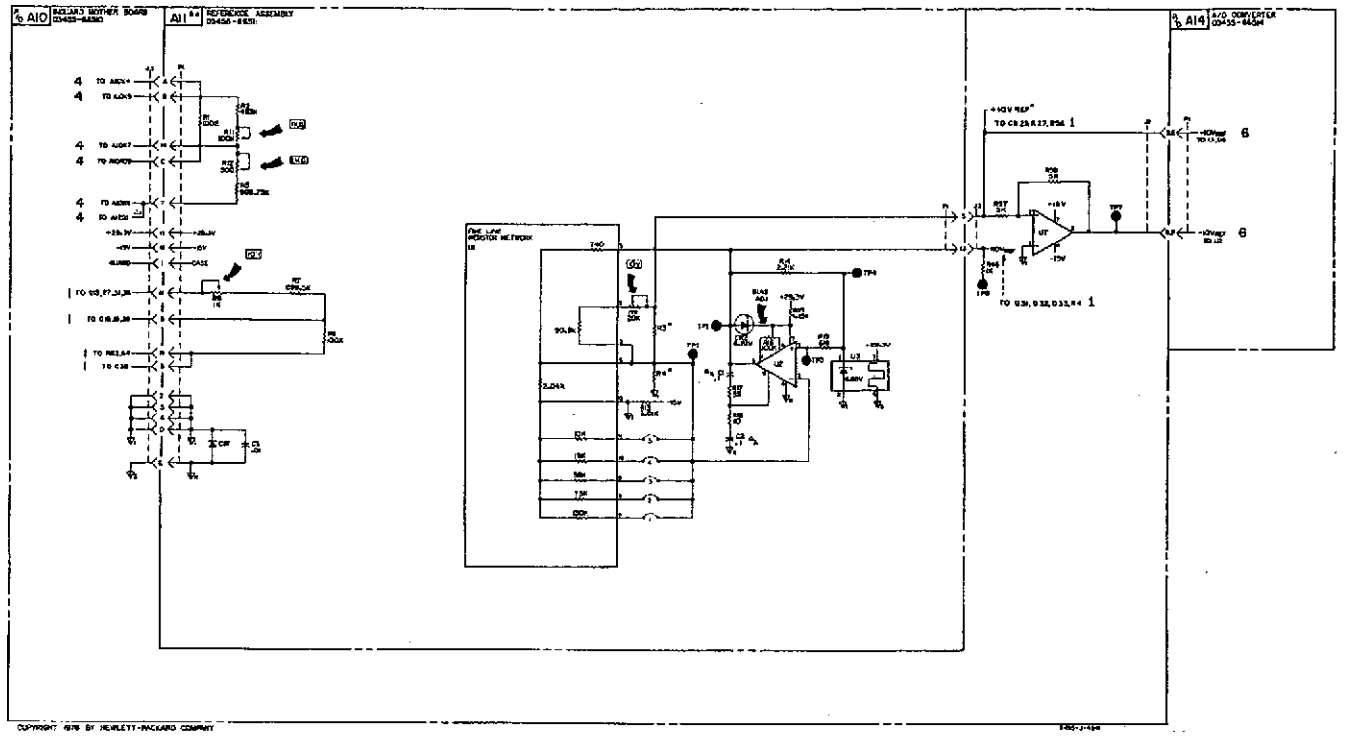

5

Figure 8-H-33. Reference Assembly.

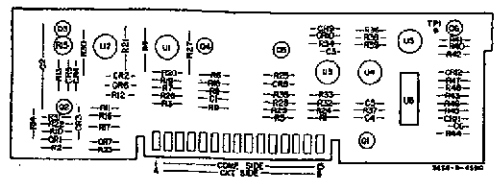

A14
03455-66514
Rev. A

Δ_R The value of R44 has been changed from 40 MΩ to 2 MΩ to prevent the zero-detect comparator from oscillating. Instruments with Serial No's 1822A01056 and greater have this change incorporated.

Δ_B Serial numbers 1822A05231 and above the following component changes have been made to improve reliability of A10U15:

	Old Part No.
R1:	0683-4335 (5.1 K)
R18:	0757-0435 (3.92 K)
R19:	0757-0421 (825)
R20:	0757-0442 (10 K)
CR2:	1901-0040
CR6:	1901-0040

Δ_C For instruments with Serial Numbers 1622A08090 and below, diodes CR2 and CR6 had Part Number 1901-0376. It is recommended to use Part Number 1901-0040, when replacing any of the diodes.

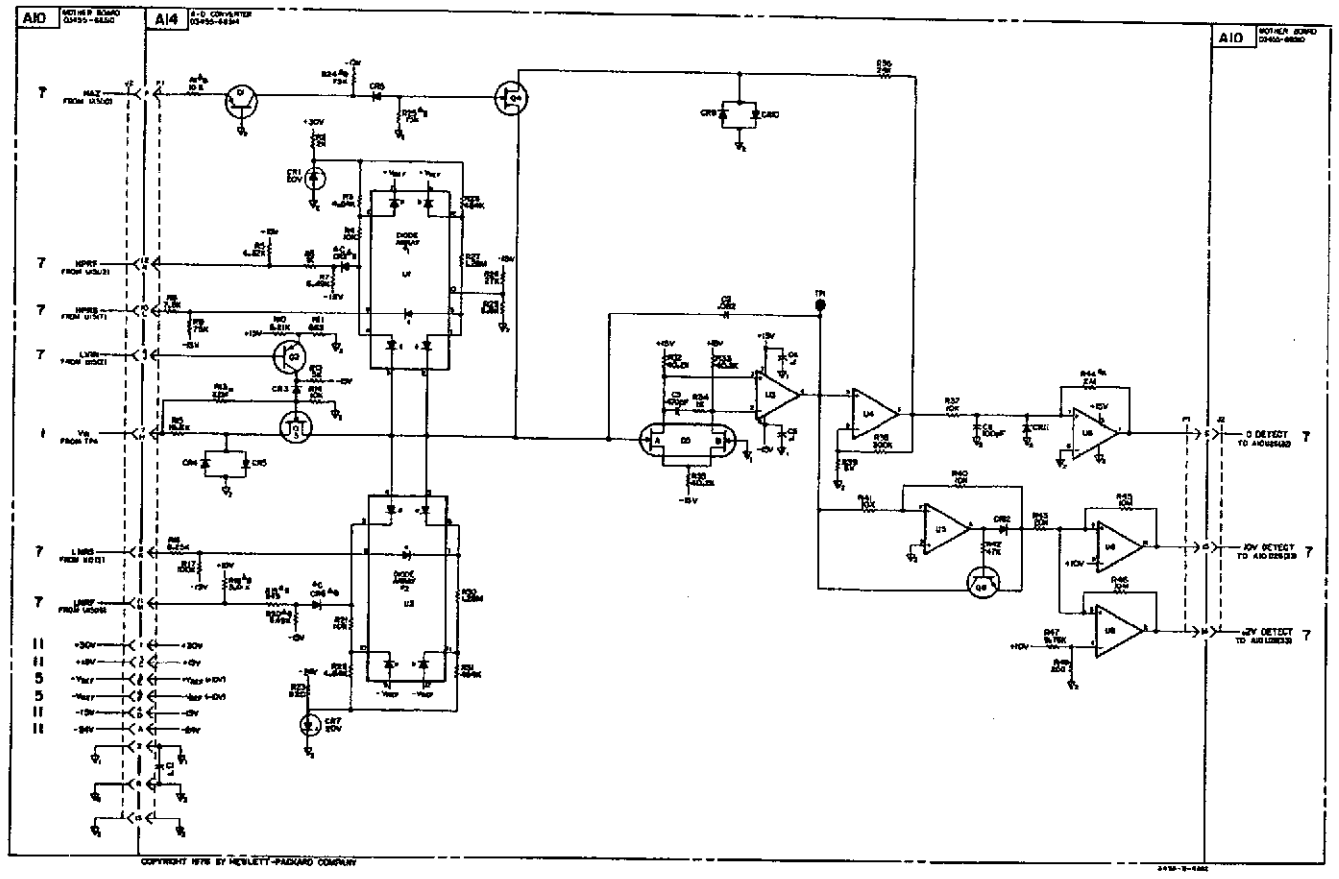

Figure 8-H-34. Analog-to-Digital Convertor Schematic.
Rev A 8-149/8-150

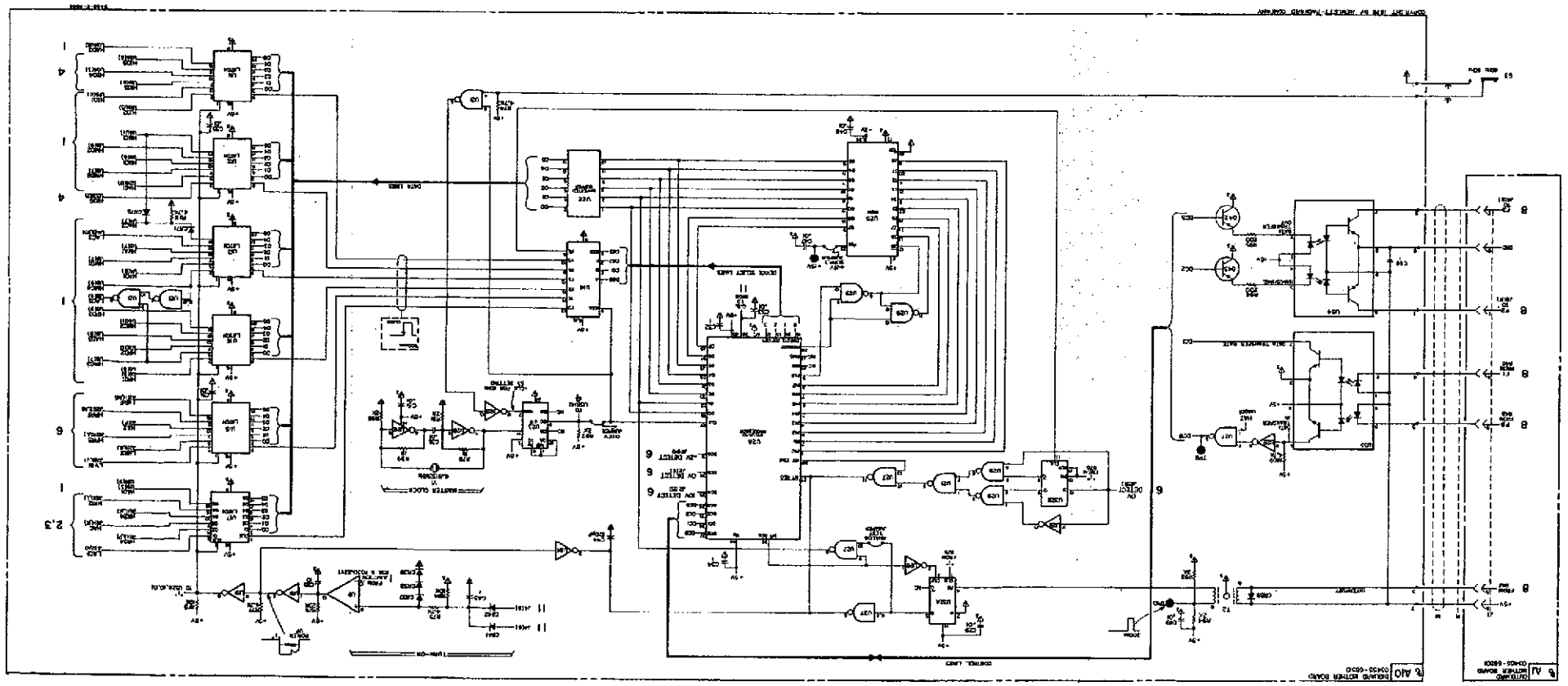

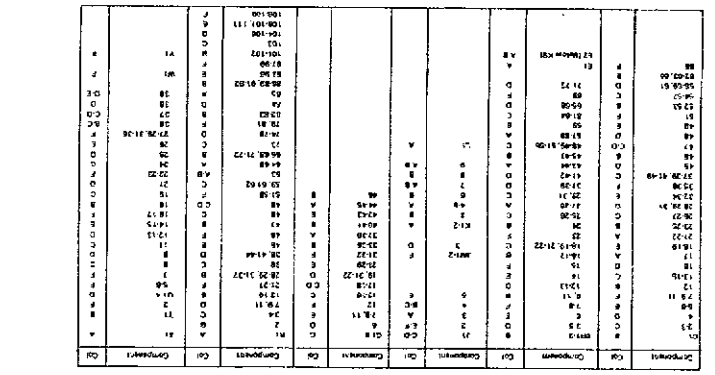

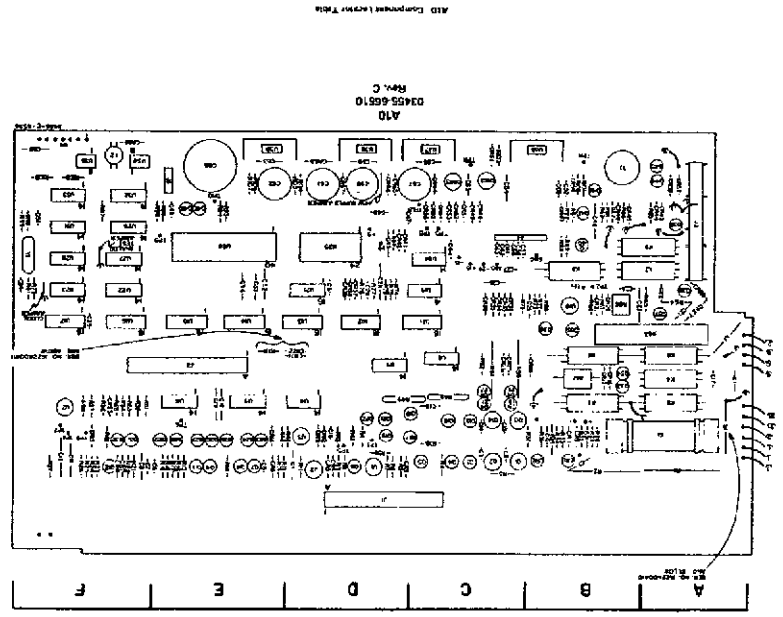

Figure 8-H-35. Inguard Controller Schematic.

4A C32 has been changed from 2.2 µF to .22 µF to eliminate double entry of front panel keys.

4G C46 applies to serial numbers 1622A01505 and above. C46 serves to reduce turn-on noise causing false interrupts.

4H For instruments with SerialNumbers 1622A10105 and below, the Gate Bias Voltage (G.B.) of the nanoprocessor (U9) may be at a different value for different processors. It was necessary to select the correct voltage by padding R3. Since all the new processors require the same gate bias voltage (−5V), selection of R3 is not necessary.

4J For instruments with Serial Numbers 1622A05650 and below, R33 is a 1K ohm resistor and a capacitor (C46) is connected between U26 pin 10 and ground. To improve the operation of the turn-on circuit, delete C46 and change R32 to the 10K ohm value (Part No. 0757-0442). Also, the Schematic applies for Revision E printed circuit boards. For older revision boards, change the schematic to the following:

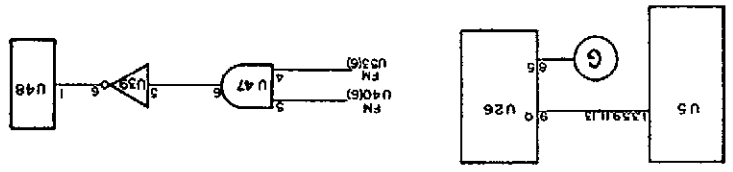

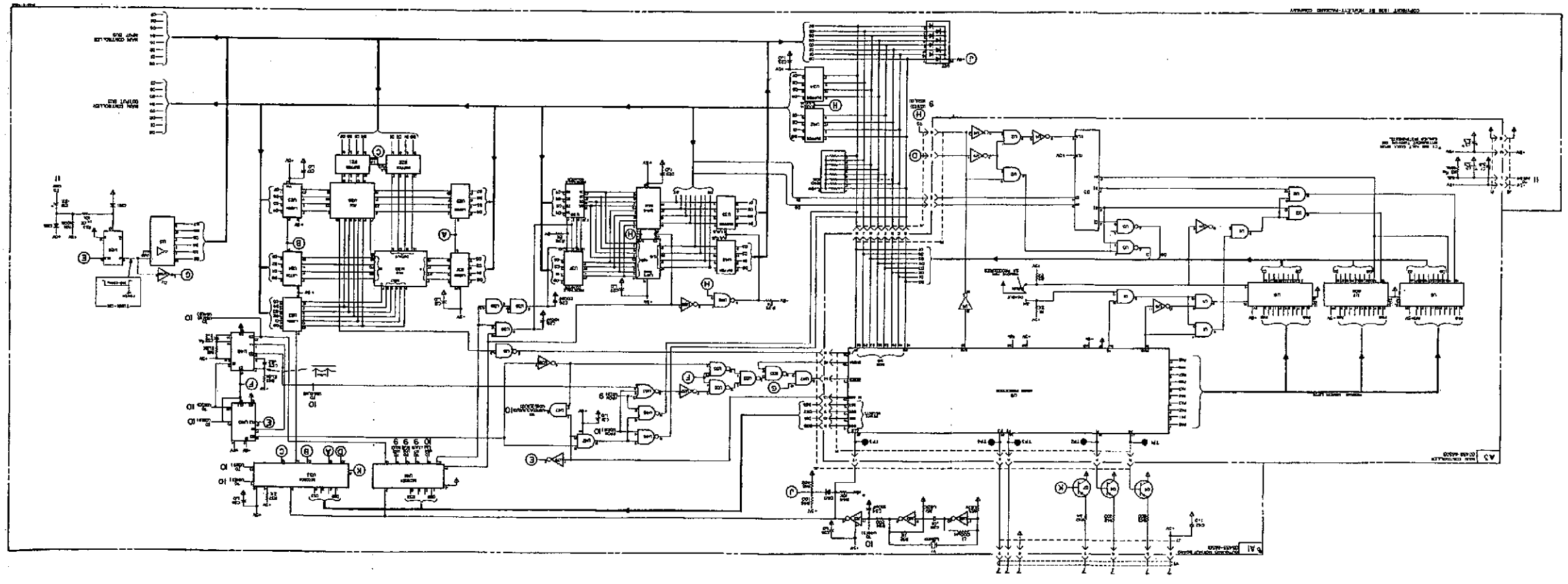

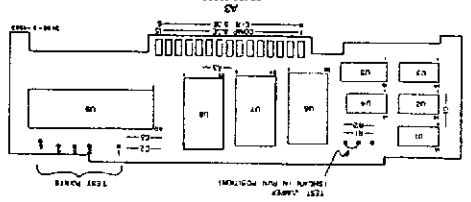

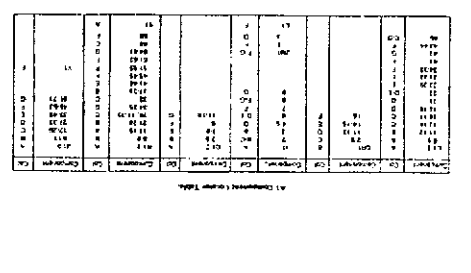

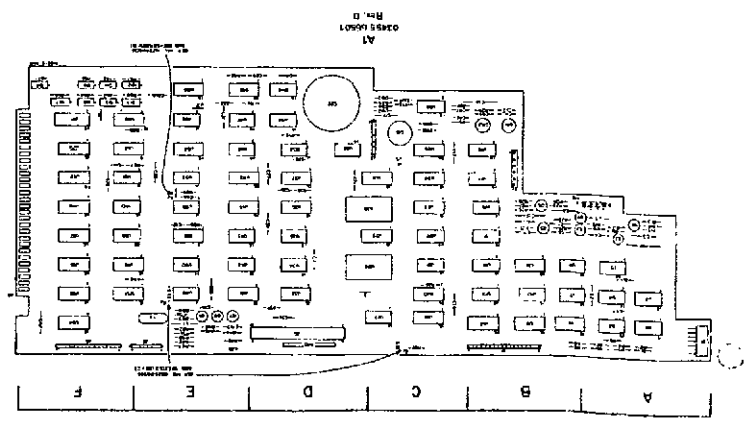

Figure 8-H-36. Main Controller Schematic
Rev A 8-153/8-154

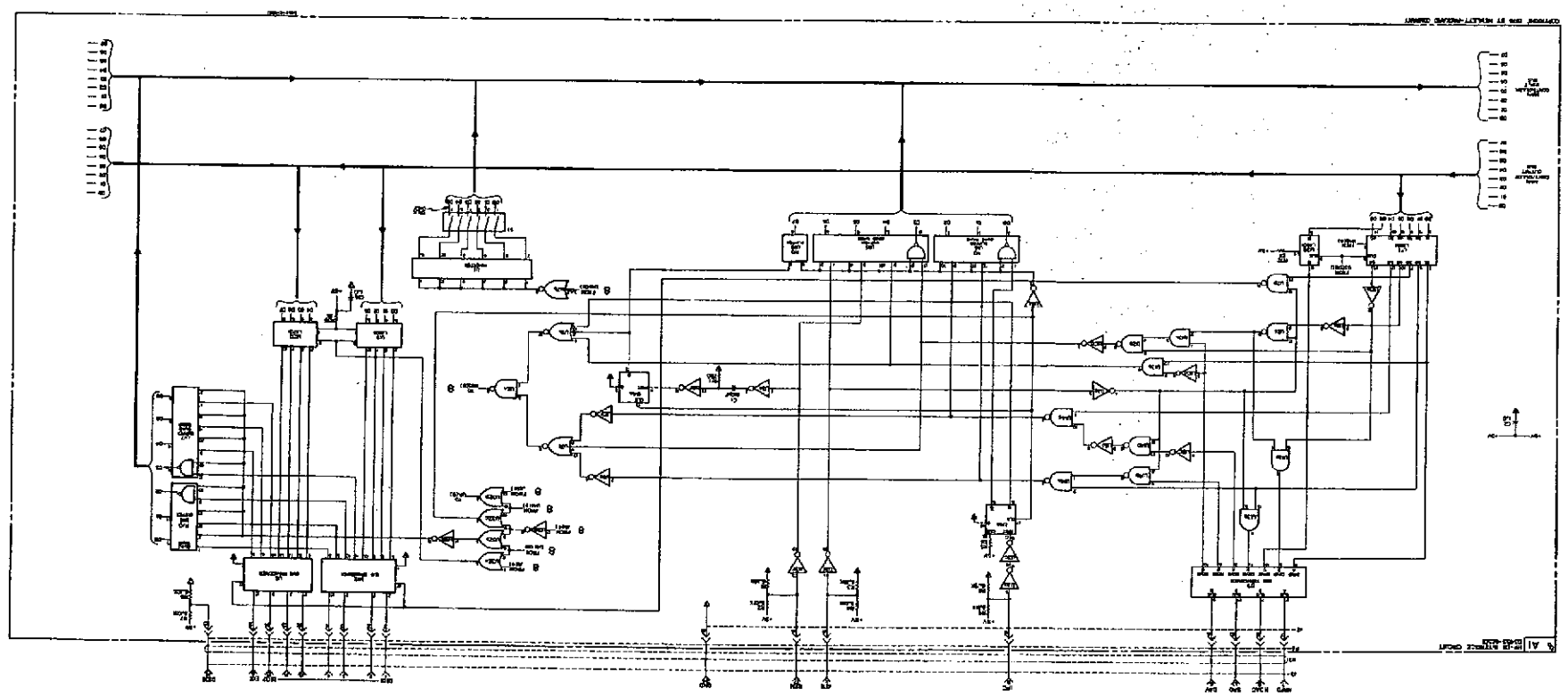

Figure 8-H-37. HP-IB Schematic.
Rev A 8-155/8-156

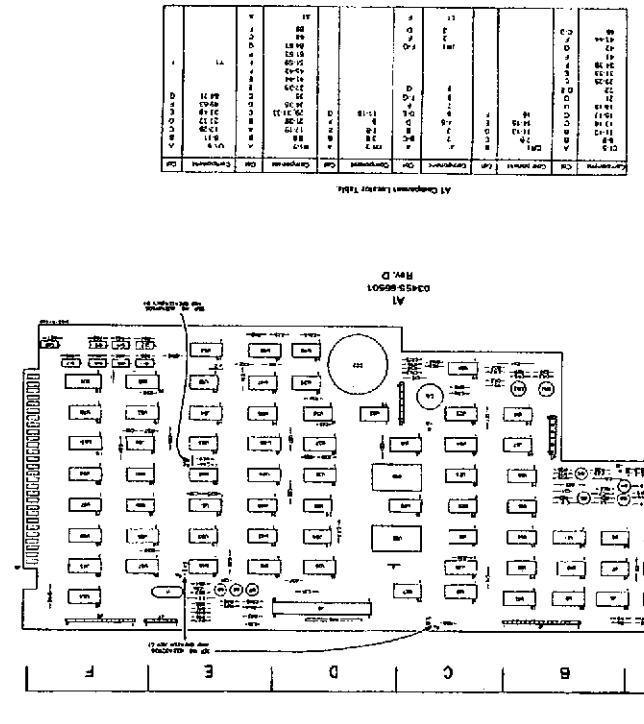

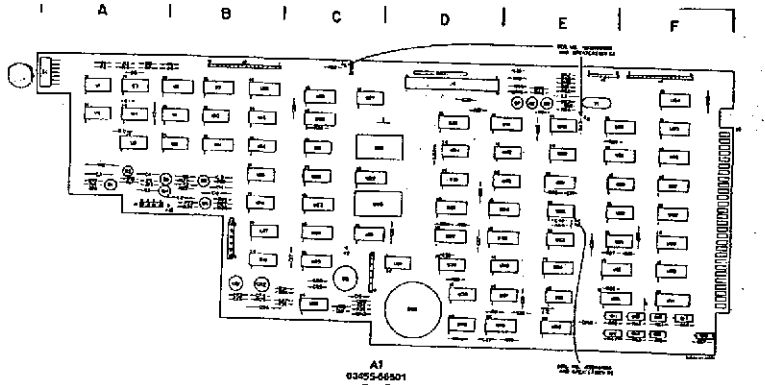

A1
03455-66501
Rev. D

Δ_A Resistor R68 has been added to instruments with Serial No's 1822A00906 and greater so the instrument can be externally triggered by a switch closure to ground. Capacitor C43 has been added to eliminate a pulse which was coupled to the clock signal. The addition of these components changed the 03455-66501 Assembly from Rev. A to Rev. C.

Δ_B A1U63 has been changed from a standard power TTL to a low power TTL device and resistor assemblies A2R17 and R19 changed from 2.2 kΩ to 10 kΩ to reduce the effects of switch contact resistance. The change has been made on instruments with Serial No's 1822A00906 and greater.

Δ_C Resistor R69 and capacitor C44 have been added to filter out pulses caused by switch bounce to eliminate "double entries" in the MATH mode. Addition of these components change the 03455-66501 assembly from Rev. C to Rev. D. This change has been made on instruments with Serial No's 1822A01506 and greater.

A1 Component Locator Table.

Description	Ckt	Description	Ckt	Description	Ckt	Description	Ckt	Description	Ckt	Description	Ckt
C1	A-1	C25	A-2	C49	A-1	D12	A-2	R16	A-2	U14	A-2
C2	A-1	C26	A-2	C50	A-1	D13	A-2	R17	A-2	U15	A-2
C3	A-1	C27	A-2	C51	A-1	D14	A-2	R18	A-2	U16	A-2
C4	A-1	C28	A-2	C52	A-1	D15	A-2	R19	A-2	U17	A-2
C5	A-1	C29	A-2	C53	A-1	D16	A-2	R20	A-2	U18	A-2
C6	A-1	C30	A-2	C54	A-1	D17	A-2	R21	A-2	U19	A-2
C7	A-1	C31	A-2	C55	A-1	D18	A-2	R22	A-2	U20	A-2
C8	A-1	C32	A-2	C56	A-1	D19	A-2	R23	A-2	U21	A-2
C9	A-1	C33	A-2	C57	A-1	D20	A-2	R24	A-2	U22	A-2
C10	A-1	C34	A-2	C58	A-1	D21	A-2	R25	A-2	U23	A-2
C11	A-1	C35	A-2	C59	A-1	D22	A-2	R26	A-2	U24	A-2
C12	A-1	C36	A-2	C60	A-1	D23	A-2	R27	A-2	U25	A-2
C13	A-1	C37	A-2	C61	A-1	D24	A-2	R28	A-2	U26	A-2
C14	A-1	C38	A-2	C62	A-1	D25	A-2	R29	A-2	U27	A-2
C15	A-1	C39	A-2	C63	A-1	D26	A-2	R30	A-2	U28	A-2
C16	A-1	C40	A-2	C64	A-1	D27	A-2	R31	A-2	U29	A-2
C17	A-1	C41	A-2	C65	A-1	D28	A-2	R32	A-2	U30	A-2
C18	A-1	C42	A-2	C66	A-1	D29	A-2	R33	A-2	U31	A-2
C19	A-1	C43	A-2	C67	A-1	D30	A-2	R34	A-2	U32	A-2
C20	A-1	C44	A-2	C68	A-1	D31	A-2	R35	A-2	U33	A-2
C21	A-1	C45	A-2	C69	A-1	D32	A-2	R36	A-2	U34	A-2
C22	A-1	C46	A-2	C70	A-1	D33	A-2	R37	A-2	U35	A-2
C23	A-1	C47	A-2	C71	A-1	D34	A-2	R38	A-2	U36	A-2
C24	A-1	C48	A-2	C72	A-1	D35	A-2	R39	A-2	U37	A-2
						D36	A-2	R40	A-2	U38	A-2
						D37	A-2	R41	A-2	U39	A-2

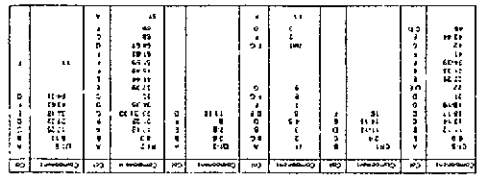

A1 Component Locator Table

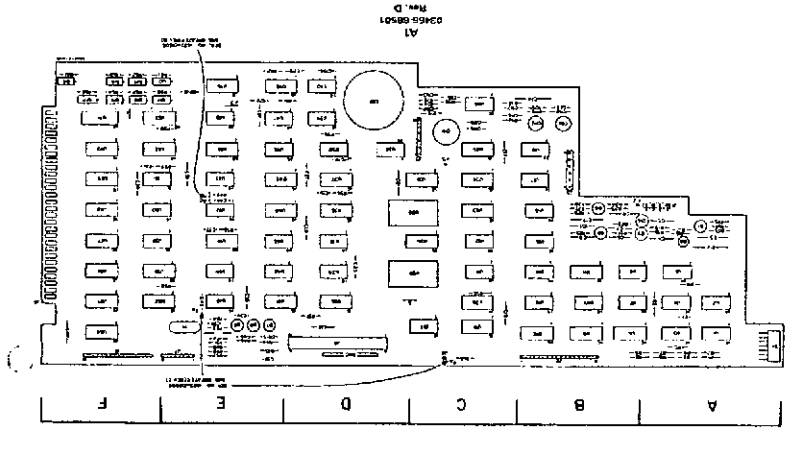

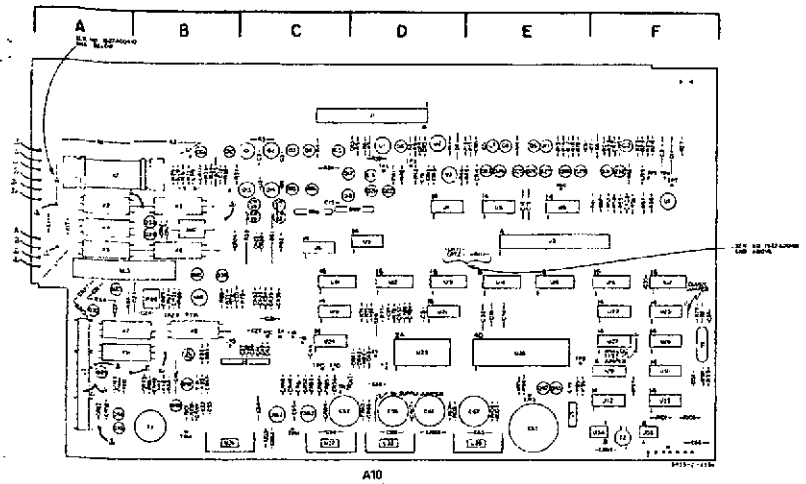

A10
03455-66510
Rev C

A6 For instruments with Serial Numbers 1622A10175 and below, the Gate Bias Voltage (G.B.) of the input nanoprocessor (A1U26) may be at a different value for different processors. It was necessary to select the correct voltage by padding R105, since all the new processors require the same gate bias voltage (−5V), selection of R105 is not necessary.

A10 Component Locator Table.

Components	Col	Components	Col	Components	Col	Components	Col	Components	Col	Components	Col
C1	G	CR1-2	B	J1	CD	Q15	C	R1	A	S1	A
C2	G	5,6	D	2	F,F	6	D	2	C		C
C3	F	7	C	3	A	7,9,13	B	3,4	C	T1	B
C4	F	7,8	A	4	B,C	17	C	7,8,11	D	2	D
C5	F	9,11	B	5	C	13,18	C	12,19	D	U14	E
C6	F	10,12	D			19,20	C	21,22	E	16	E
C7	C	14	D			21,22,23,27	D	26,29,31,32	E	9	E
C8	A	15	D			27,28	D	33,34	E	8	E
C9	A	16,17	D	J401-2	A	31,33	D	35,41-44	E	11	D
C10	A	18,19,21,22	D	3	D	33,38	A	45	E	15	D
C11	B	23	B	J412	A	37,39	A	46	E	17,32	D
C12	B	24	B	2	A	42,43	A	47	E	14,35	E
C13	B	25,26	B	3	A	45,47	A	48	E	36,37	E
C14	B	27,28	B	4	A	44,45	A	49	E	38	E
C15	B	29,31	B	5	A	46	A	50	E	39	E
C16	B	30,32	B	6	A			U1,38	B	40	E
C17	B	33,34	B	7	A,C			39,40,41,42	C	21	D
C18	B	35,36	B	8	A,B			43	A,B	22,23	D
C19	B	37,38	B	9	A,B			44,45	A	24	D
C20	B	39,40	B	J5	A			U5,12,16,17,27	A	25	D
C21	C,C	41,42	B					28,42,43,51	A	26	D
C22	D	43,44,50,51,52	B					46,47,48	A	28,30,31,35	D
C23	D	45,48	B					49,50	A	34	D
C24	D	46,47	B					52	A	36	D
C25	D	49	B					53,54	A	37	D
C26	D	53,55	B					55	A	39	D
C27	D	54,56	B					56,57,58,59,60	A		
C28	D	57,58	B					61,62	A		
C29	D	59,60	B					63	A		
C30	D	61,62	B					64	A		
C31	D	63,64	B					65,66	A		
C32	D	65,66	B					67,68	A		
C33	D	67,68	B					69,70	A		
C34	D	69,70	B					71,72	A		
C35	D	71,72	B					73	A		
C36	D	73,74	B					74,75	A		
C37	D	75,76	B					76,77	A		
C38	D	77,78	B					78,79	A		
C39	D	79,80	B					80,81	A		
C40	D	81,82	B					82,83	A		
C41	D	83,84	B					84	A		
C42	D	85,86	B					85	A		
C43	D	87,88	B					86,87,88,89,91,92	A		
C44	D	89,90	B					93,94	A		
C45	D	91,92	B					95,96	A		
C46	D	93,94	B					97,98	A		
C47	D	95,96	B					99,100	A		
C48	D	97,98	B					101,102	A		
C49	D	99,100	B					103	A		
C50	D	101,102	B					104,105	A		
C51	D	103,104	B					106,107,108,109	A		
C52	D	105,106	B					110,111	A		
C53	D	107,108	B					112,113	A		
C54	D	109,110	B					114,115	A		

APPENDIX A

A-1. INTRODUCTION.

A-2. The following section of this manual gives some remote programming (HP-IB) examples for the 3455A. These examples are given in the HP Basic (-hp- Model 9830A/B Controller), HPL (-hp- Model 9825A Controller), and Enhanced Basic (-hp- Models 9835A/B and 9845A/B) Controller) languages.

A-3. For effective program writing, it is advisable to write a good algorithm first. Then write the 3455A program using the HP-IB information in Section III of this manual and the appropriate controller manual. Most -hp- controller manuals have a summary of the HP-IB messages (usually in the HP-IB section) in a tabular form. These messages are written in the respective controller languages and are given as sample HP-IB operations. This information and the following program examples can be very helpful when you start writing programs for the 3455A.

A-4. *Program Example #1:* In this program example, the 3455A is set up to take 50 readings quickly (with Auto-Cal off) and stores them into an Array. Each reading is printed out after all the readings have been taken. The 3455A is then set back to the Auto-Cal mode to insure accuracy. The programs in this example perform basically the same functions using different languages. The first program in this example is written in the HP Basic language, the second in HPL, and the third in Enhanced Basic.

Example # 1 (HP Basic).

```
10 DIM A[50]
20 CMD "?U6","F1R7T2T3A0D0"
30 FOR I=1 TO 50
40 CMD "?U6"
50 FORMAT 3B
60 OUTPUT (13,50)256,8,512
70 CMD "?V5"
80 FORMAT E13.6
90 ENTER (13,80)A[I]
100 NEXT I
110 CMD "?U6","A1"
120 FOR I=1 TO 50
130 PRINT A[I]
140 NEXT I
150 END
```

Set DVM to DCV (F1), Autorange (R7), Hold/Manual (T3), Auto-Cal Off (A0) and Data Ready Off (D0).
Begin For...Next Loop
Address DVM to Listen, Controller to Talk.
Format the Output.
Trigger the DVM (GET).
Set DVM to Talk.
Format the Output (reading).
Enter the Output into Variable.
Complete For...Next loop.
Auto-Cal on to Maintain Accuracy (A1).
Begin For...Next Loop.
Print the Entire Array.
Complete For...Next Loop
Ends the Program.

Example #1 (HPL).

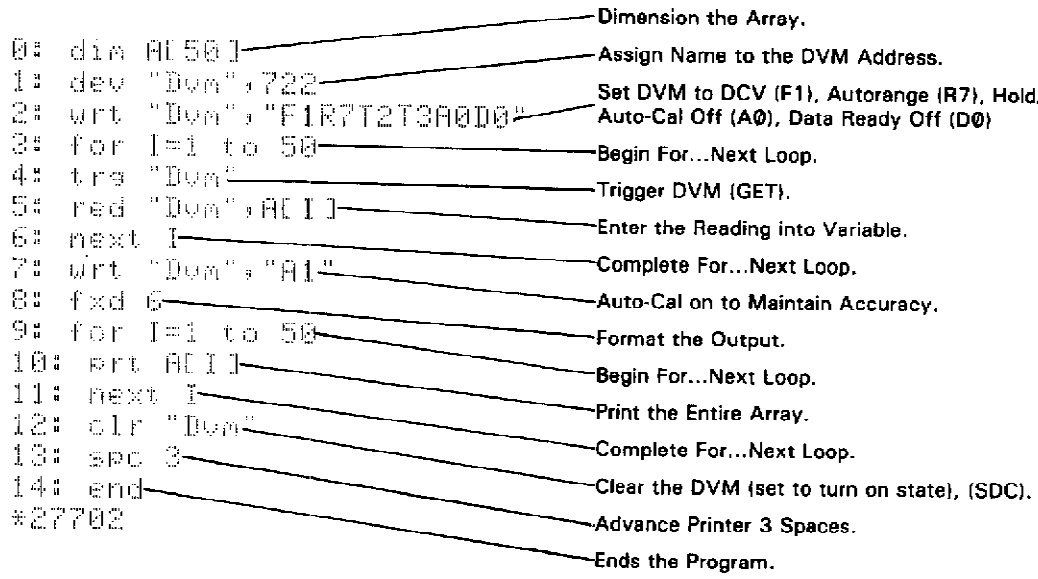

Example #1 (Enhanced Basic)

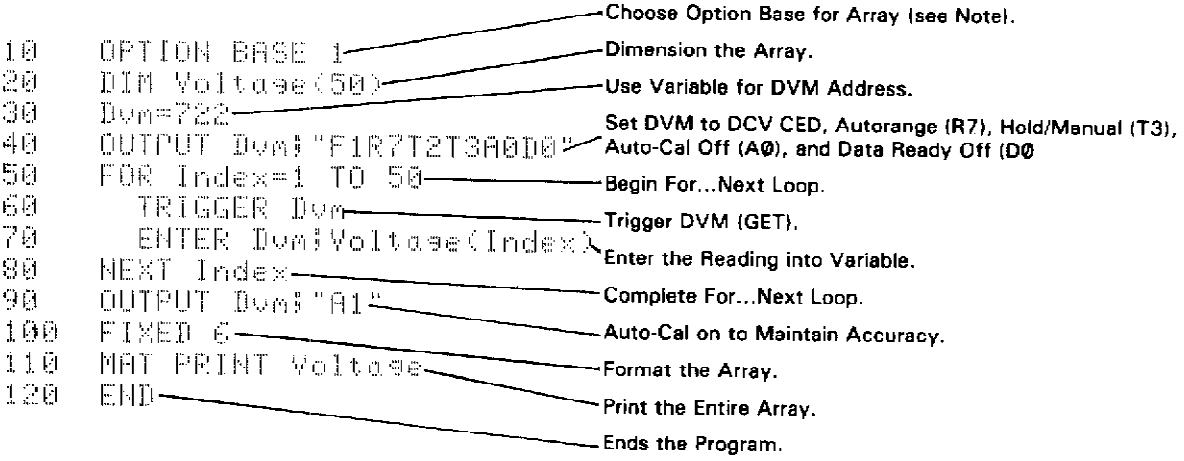

Note: Refer to Controller Manual for Explanation of Option Base

A-5. *Program Example #2:* When the 3455A is in the Binary mode, another feature called the "Learn Mode" can be used. With this feature, the set-up of the instrument (F1T3, etc) can be learned by the controller to be used later on in the program. This can be accomplished by sending the 3455A an ASCII "B" in the Data Mode and reading the next four bytes output by the instrument into a string variable. The instrument can then be reprogrammed to the previous set-up by using the string variable instead of program codes. It is important to remember to program the 3455A into the Binary mode by sending an ASCII "B". The instrument can transfer its set-up information to the controller in the Binary mode only. The following programs show how the "Learn Mode" feature can be used. These programs are written in the HP Basic, HPL, and Enhanced Basic languages.

Example # 2 (HP Basic)

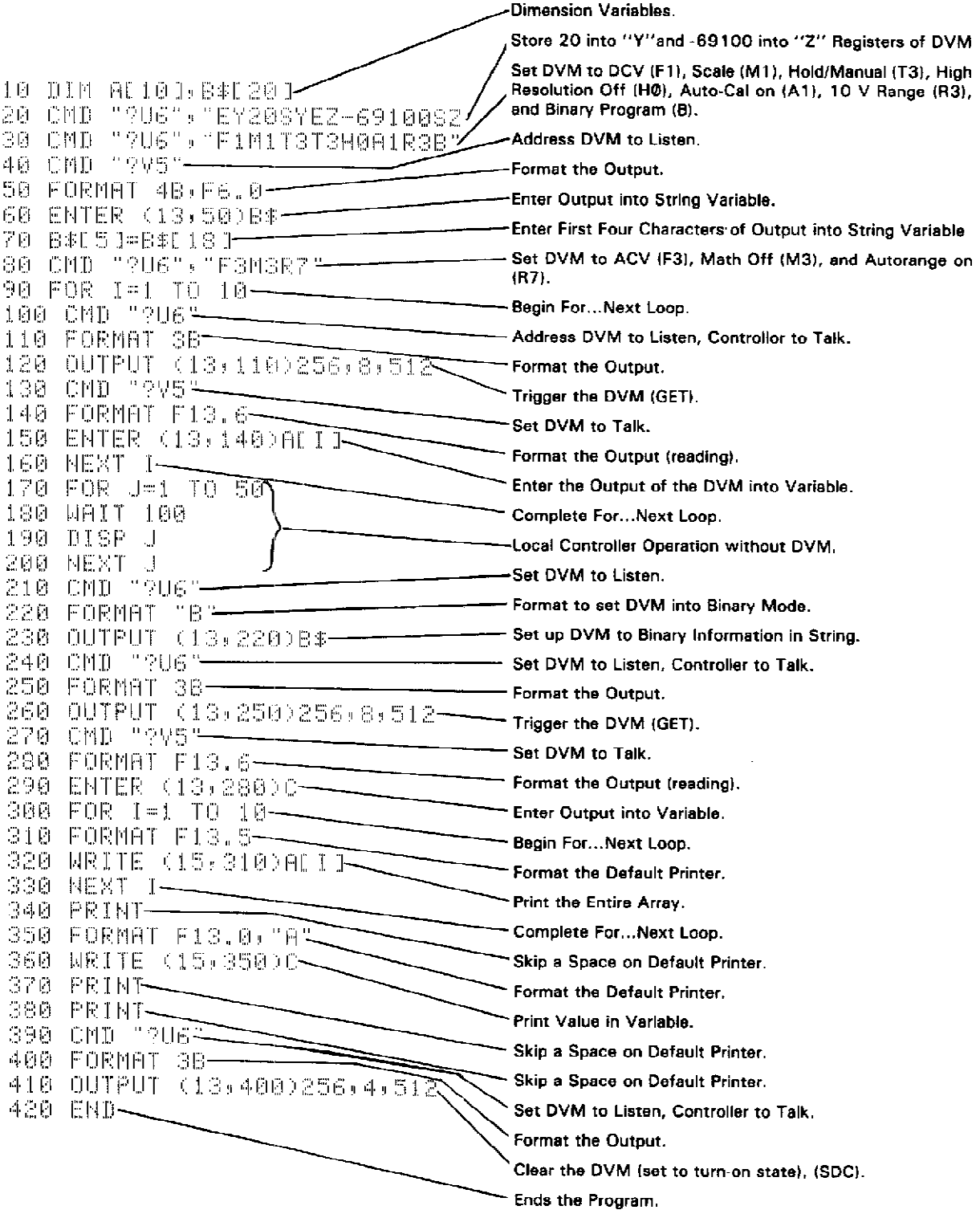

Example # 2 (HPL)

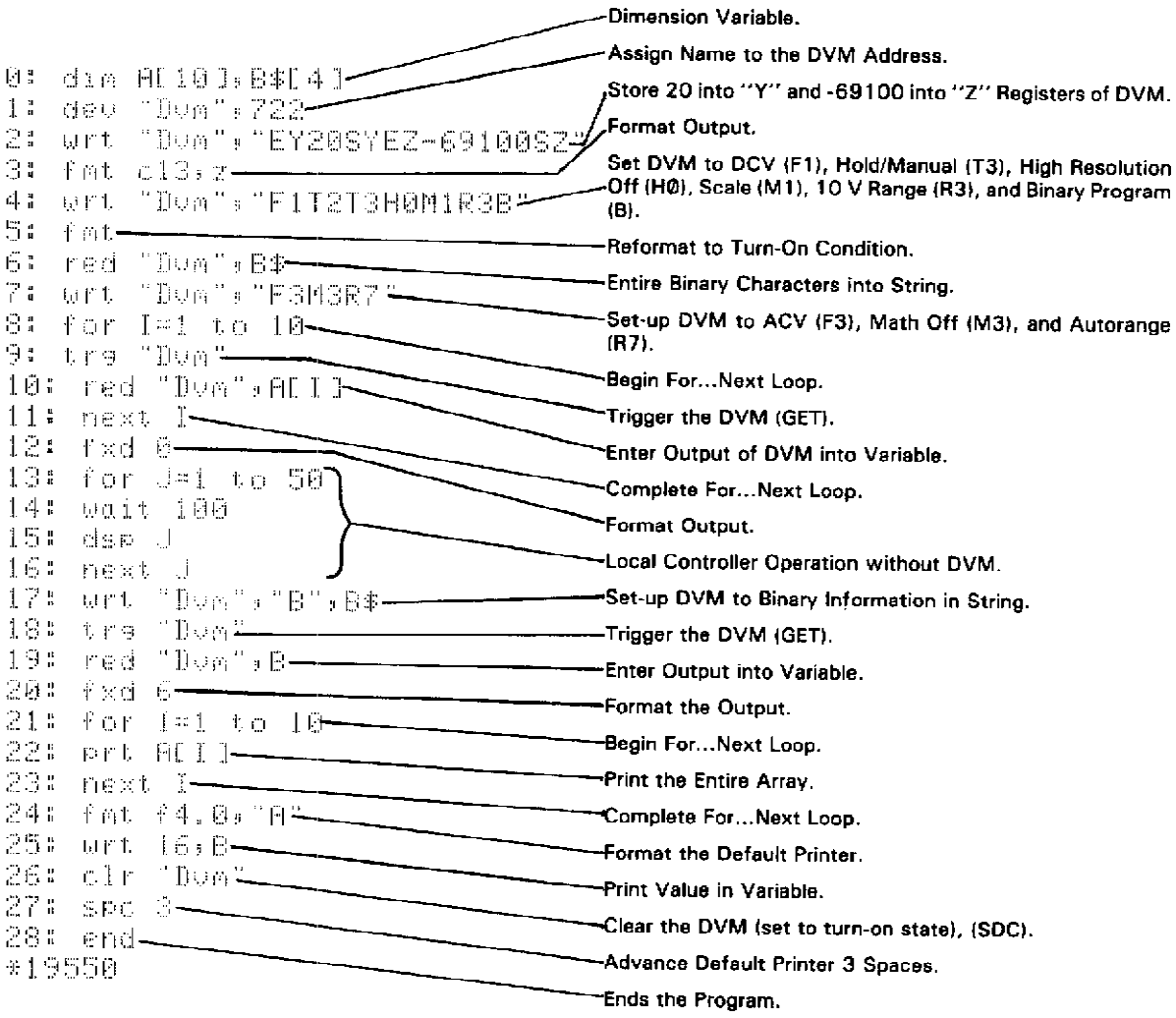

Example #2 (Enhanced Basic)

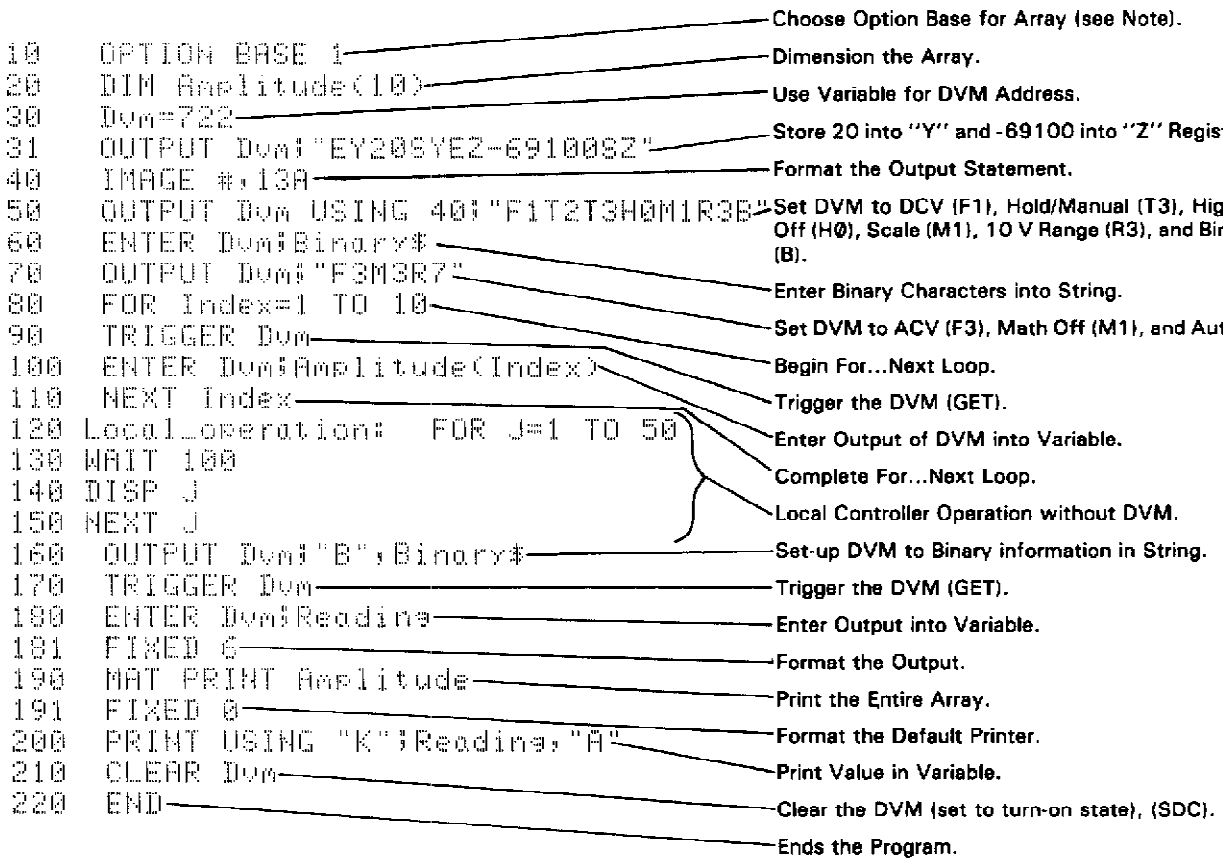

Note: Refer to Controller Manual for explanation of Option Base.